# Transportation Improvement Program (TIP)

Fiscal Year 2018 to 2021

Approved by the MPO Policy Board on May 24, 2017

Last adjusted or amended: April 24, 2020

Thomas Jefferson Planning District Commission

Charlottesville/Albemarle MPO

VDOT Virginia Department of Transportation

DRPT Virginia Department of Rail and Public Transportation

U.S. Department of Transportation Federal Highway Administration

FTA Federal Transit Administration

# Table of Contents


Table of Contents ..... 2
TIP Activity ..... 3
Purpose of this Document ..... 5
Introduction to the Charlottesville/Albemarle Metropolitan Planning Organization (MPO) ..... 5
Introduction to Transportation Improvement Program (TIP) ..... 6
Getting Involved in the MPO and the TIP Development ..... 8
Resource Documents: ..... 10
TIP User's Guide: Understanding the TIP Format ..... 11
Glossary of Terms ..... 11
TIP Financial Information ..... 13
Table C: CAMPO Federal Funding Categories Fiscal Constraint by Year (Hwy 2018-2021) ..... 17
Primary Projects ..... 18
Transit Summary ..... 38
CAT Summary ..... 39
JAUNT Summary ..... 47
Appendix A. Projects by Grouping ..... 53
Appendix B. Performance Based Planning and Programing for Roadways ..... 54
Performance Based Planning and Programming ..... 54
CA-MPO Interstates and National Highway System Roadways ..... 57
Performance-Based Planning and Programming in the TIP and LRTP: ..... 57
Appendix C. Transit Asset Management ..... 59
Transit Asset Management Plans ..... 59
Appendix D. Self-Certification Statement ..... 61
Appendix E. Resolution of Adoption FY 18-21 TIP ..... 62
Appendix F. TIP Amendment Resolutions ..... 63
Appendix G. VDOT Performance Based Planning and Programming ..... 69

## TIP Activity

### Amendments

| Amendment # | Date | Notes |
|---|---|---|
| 1 | 11/29/2017 | UPC 75878 |
| 2 | 2/27/2019 | CAT0003 |
| 3 | 1/22/2020 | Grouping:<br>Maintenance and System Preservation Preventive<br>Maintenance for Bridges<br>Maintenance Traffic and Safety Operations<br><br>Add CAT0019 and transfer $595,000 from CAT 0017 to CAT0019 |

### Adjustments

| Adjustment # | Date | Notes |
|---|---|---|
| 1 | 11/29/2017 | UPC 16160, UPC 60233, UPC 85708, UPC 106138, UPC 110381 |
| 2 | 03/28/2018 | UPC 60233 |
| 3 | 05/07/2018 | CAT0001, CAT0002, CAT0003, CAT0007, JNT0001, JNT0002, JNT0006, JNT0009, JNT0010, JNT0012, JNT0014, JNT0016, JNT0017, JNT0019 |
| 4 | 05/28/2018 | a) JNT0016<br>b) Performance Based Planning Document is added to the TIP as Appendix B<br>c) Project Grouping - Maintenance: Preventive |
| 5 | 06/28/2018 | a) Project Grouping - Maintenance: Preventive Maintenance and System Preservation<br>b) Project Grouping - Maintenance: Preventive Maintenance for Bridges |
| 6 | 8/24/2018 | a) UPC 106139<br>b) Appendix. B updated to include PM2 and PM3 Measures, Appendix. C added to include Transit Asset Management |
| 7 | 11/1/18 | a) UPC 110381, UCP 60233<br>b) Grouping: preventative Maintenance Bridges |
| 8 | 2/6/2019 | PC 60233, UPC 75878, CAT0007, CAT0017, Appendix B Safety performance measures |
| 9 | 4/12/2019 | CAT0001, JNT0001, JNT0002, JNT0006, JNT0009, JNT0015, JNT0016 |
| 10 | 5/22/2019 | a) UPC 85708<br>b) VDOT Performance Based Planning and Programming documents added as Appendix G |
| 11 | 9/13/2019 | Grouping: Preventative Maintenance and System Preservation |
| 12 | 11/21/2019 | Grouping: Preventive Maintenance and System Preservation |
| 13 | 12/10/2019 | UPC 16160 |
| 14 | 12/10/2019 | UPC 102419 |
| 15 | 12/10/2019 | UPC 106136 |
| 16 | 12/10/2019 | UPC 75878 |
| 17 | 12/10/2019 | UCP 85708 |
| 18 | 12/10/2019 | UCP 60233 |
| 19 | 12/16/2019 | UCP 106138 |
| 20 | 12/16/2019 | UCP 106139 |
| 21 | 12/16/2019 | Grouping: Maintenance: Preventive maintenance and system preservation |
| 22 | 12/16/2019 | Grouping: Maintenance for bridges |
| 23 | 12/16/2019 | Grouping: Maintenance: traffic and safety operations |
| 24 | 4/24/2020 | UPC 75878 |

## Purpose of this Document

The Charlottesville-Albemarle Transportation Improvement Program (TIP) is a document used to schedule spending of federal transportation funds within the metropolitan region, in coordination with significant state and local funds for the federal fiscal years 2018 through 2021. It also demonstrates how these projects comply with federal planning regulations. The TIP is a product of the Charlottesville-Albemarle Metropolitan Planning Organization (MPO) in compliance with federal requirements.

## Introduction to the Charlottesville/Albemarle Metropolitan Planning Organization (MPO)

The Charlottesville-Albemarle Metropolitan Planning Organization is the forum for continued, cooperative and comprehensive transportation decision-making among Charlottesville, Albemarle, state, and federal officials. Federal law (23 CFR Part 450) requires urbanized areas in the United States with populations greater than 50,000 persons to establish an MPO to coordinate transportation planning. The boundary of the Charlottesville-Albemarle MPO includes the City of Charlottesville and the adjacent urbanized areas of Albemarle County (the rural areas of Albemarle County are outside the MPO boundary, as is illustrated on the map below).

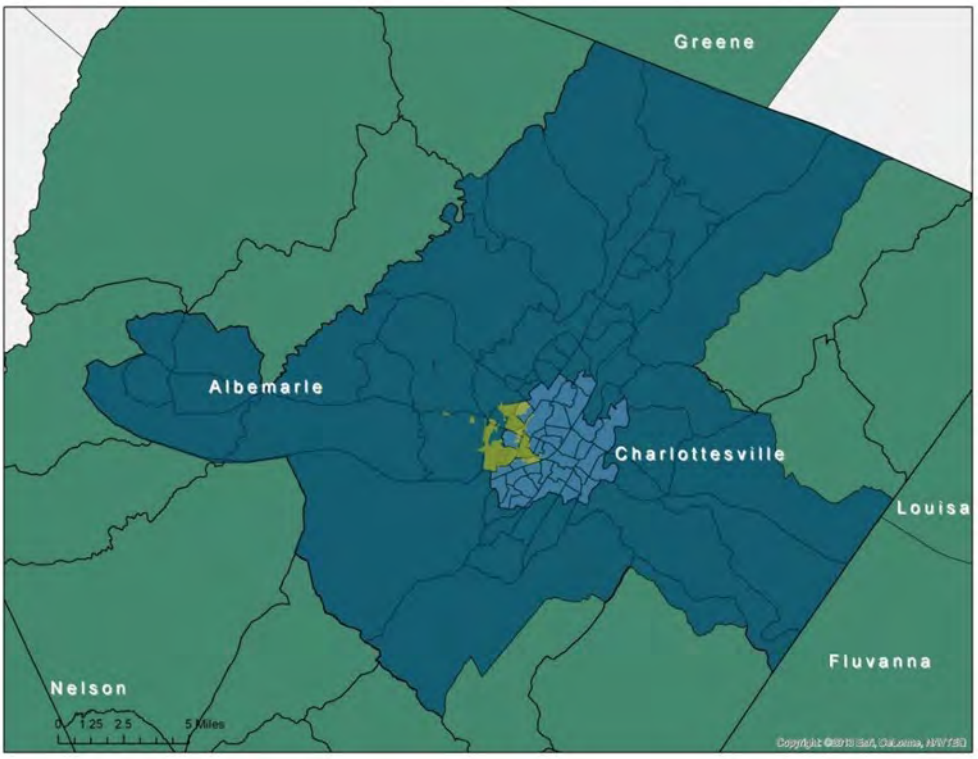


**Illustration: Charlottesville-Albemarle MPO**

The MPO considers long-range regional projects and combines public input, technical data, and agency collaboration to develop forward-thinking solutions to transportation related challenges. The MPO is responsible for carrying out a continuous, cooperative, and comprehensive transportation planning process. This process includes reviewing transportation projects and preparing studies and plans. The Charlottesville-Albemarle MPO is governed by the MPO Policy Board and staffed by the Thomas Jefferson Planning District Commission (TJPDC). MPO Policy Board membership consists of 12 representatives from the following organizations:

| **Voting Member Organizations (5)** | **Nonvoting Member Organizations (8)** |
|---|---|
| Albemarle County Board of Supervisors [two members] | Charlottesville Area Transit (CAT) |
| Charlottesville City Council [two members] | Citizens Transportation Advisory Committee (CTAC) |
| Va. Dept. of Transportation (VDOT) | Federal Transit Administration (FTA) |
| | Federal Highway Administration (FHWA) |
| | JAUNT |
| | Thomas Jefferson Planning District Commission (TJPDC) |
| | UVA Office of the Architect |
| | Va. Dept. of Rail and Public Transportation (DRPT) |

Two committees support the MPO Policy Board: The MPO Technical Committee and a Citizens Transportation Advisory Committee (CTAC). These two committees include representatives from the following organizations:

- Albemarle County
- City of Charlottesville
- Federal Aviation Administration (FAA)
- Federal Highway Administration (FHWA)
- Federal Transit Administration (FTA)
- Virginia Department of Transportation (VDOT)
- Virginia Department of Rail and Public Transportation (VDRPT)
- University of Virginia
- Charlottesville Area Transit
- JAUNT

# Introduction to Transportation Improvement Program (TIP)

## What is TIP?

The Charlottesville-Albemarle MPO Transportation Improvement Program (TIP) is *a prioritized listing/program of transportation projects covering a period of four years that is developed and formally adopted by an MPO as part of the metropolitan transportation planning process, consistent with the metropolitan transportation plan, and required for projects to be eligible for funding under title 23 U.S.C. and title 49 U.S.C. Chapter 53. It represents projects* from the most recently adopted Long Range Transportation Plan, the 2040 LRTP. The fiscal year for the FY2018-2021 TIP begins on October 1, 2017 and is applicable until September 30, 2020. The Federal Highway Administration (FHWA) is a primary sponsor for many of the highway projects listed in the TIP. Activities listed for Charlottesville Area Transit (CAT) and JAUNT are projects and programs expected to obligate federal funds over the coming four-year period. The primary sponsor of funding for these activities is the Federal Transit Administration (FTA).

## The Purpose of TIP

The TIP:

- Prioritizes transportation projects expected to be implemented during a four-year period, and describes the schedule for obligating federal funds.
- Contains a financial plan for all modes of transportation including roadways and transit capital and operating costs.
- Serves as a tool for monitoring progress in implementing the MPO's long range transportation plan.
- Is incorporated into the State Transportation Improvement Program (STIP), for its submission to FHWA, FTA, and the Environmental Protection Agency (EPA) for approval.
- Includes state and locally funded regionally significant transportation projects to provide a comprehensive view of transportation projects in the Charlottesville-Albemarle area.
- Includes regionally significant unfunded, visioning transportation projects that are significant to the region's transportation network improvement strategies.

## Selecting Projects for TIP

The FHWA tracks all federally funded projects in the Statewide Transportation Improvement Program (STIP), which incorporates each MPO TIP by reference, in total and without change. The STIP includes all transportation projects in the state of Virginia that are scheduled to receive federal funding over a four-year interval and must first be included in the Six Year Improvement Program (SYIP), developed by VDOT, in cooperation with local governments.

The SYIP is updated biennially and includes a listing of projects, their descriptions, funding sources, and cost estimates. The Commonwealth Transportation Board (CTB) approves the SYIP for the upcoming six-year period by June 30 of every other year. Smart Scale is the State's data driven process for evaluating and selecting funding for most projects in the SYIP.

All projects which appear in the SYIP and require federal approval are included in the TIP; state and locally funded projects are not included in the TIP, unless deemed regionally significant. The schedule and cost estimate for each phase of a project, as well as phase allocation and obligation information per project, can be found in the currently adopted VDOT SYIP, and is available at http://www.virginiadot.org/projects/syp-default.asp. Some projects in the TIP are not shown as individual projects. Rather, they are grouped together and shown as a single line item in the TIP. This single line-item represents a grouping of projects with similar funding categories, and displays a cumulative sum of obligations rather than obligations per project.

## Transportation Goals and Priorities

The Charlottesville-Albemarle MPO has long-standing transportation goals and priorities that are defined in the regional long-range transportation plan, the 2040 Long Range Transportation Plan (2040 LRTP). As required under federal regulations, the 2040 LRTP is a listing of the most important projects for the MPO area over the next 20 years. Due to budget constraints, the 2040 LRTP focuses on a practical set of improvements that maximizes the effectiveness of existing transportation investments.

## Primary Goal and Major Factors

The overarching regional transportation system goal is to create a balanced, multimodal transportation network, by 1) improving connections throughout the region; 2) improving mobility within neighborhoods, towns, and counties; and 3) making transportation choices that help foster livable communities. Several major objectives have been identified to help the MPO achieve these goals:

- **Completion of a well-connected network of roadways parallel to major highways** with better connections within and between neighborhoods.
- **Re-engineered intersection and corridor design**, along with added lanes and capacity

improvements, to improve operational efficiency and safety.

- **Fast, frequent, dependable transit service** with seamless connections throughout the region.
- **A grid of smaller streets** serving more compact development forms in the suburban and rural developments.
- **Well-executed design details** for pedestrian-friendly streets, bike lanes and trails, transit stops, safer intersections, and pedestrian crossings.

All of these elements will also help complete the transit "customer delivery system" needed for efficient, cost-effective transit operations. By building new critical facilities and re-engineering existing roadways, overall system operations and safety will be improved.

The regional dynamics of interconnected roads; coordinated transit systems such as JAUNT, CAT, UTS, and Park and Ride lots; varied commuting patterns; and regional destinations for shopping and recreation point to the need for a coordinated, multi-modal regional transportation plan. This plan must be effectively implemented if the region is to continue to flourish and grow in keeping with the quality of life we currently enjoy. Because the majority of local roadway construction is actually funded privately by developers building new subdivision streets, significant progress can be made through better planning and project coordination. By encouraging more interconnections between new developments, coupled with lower-speed and safer roadway design, a major portion of the roadway network can be completed with private funds. With careful planning, public funding can be maximized by "connecting the dots" between developments.

### Specific Emphasis

A better-connected network of neighborhood streets will help relieve traffic congestion along heavily used corridors, and reduce congestion at major bottlenecks and intersections. These streets will also provide for many safety improvements to the overall transportation network, allowing people to access nearby destinations on smaller-scale, pedestrian-, bike-, and transit-friendly roadways.

While a major focus is expedited project implementation, several new roadways and improvement projects are completed or underway to provide better multi-modal connections and through movements. Some roadways require minor and/or spot improvements, widening, realignments, widened shoulders, or expanded lanes. These projects will improve safety and capacity.

To provide residents and businesses with safe, efficient and truly usable transportation options, the MPO Long Range Plan includes significant emphasis on bike, pedestrian and transit projects. Strategies include a focus on improvements around existing villages, coupled with better connections between neighborhoods, schools, and town centers. Other improvements for pedestrian safety can be made that do not require capital funding and include enhanced enforcement of safety laws.

## Getting Involved in the MPO and the TIP Development

### MPO Area Meetings

All meetings for the MPO Policy Board and the two other MPO committees are open to the public. Time is reserved at the start and finish of each meeting for comment from members of the public. All meetings are held at the TJPDC Office's Water Street Center, 407 E. Water St., Charlottesville, VA 22902. For more information about the MPO and its committees, please visit http://campo.tjpdc.org/.

### TIP Development

The MPO encourages public involvement in the TIP process. A table summarizing the public comments and MPO responses is located in the Appendix. Time is also allotted for public comment concerning the SYIP at the Spring public hearings and the Fall public meetings. For more information about MPO Public Hearings, please visit http://campo.tjpdc.org/committees/

For more information about the CTB, please visit http://www.ctb.virginia.gov/For more information about Smart Scale, the process for the Six Year Improvement Program (SYIP), please visit http://vasmartscale.org/.

## Resource Documents:

| | | |
|---|---|---|
| 1 | 2040 Long Range Transportation Plan | http://campo.tjpdc.org/process-documents/lrtp-document/ |
| 2 | Albemarle County Places29 Master Planning Process | http://www.albemarle.org/department.asp?department=cdd&relpage=3735 |
| 3 | 29H250 Phase II Report | http://campo.tjpdc.org/reports-and-documents/us-29-hydraulic-250-bypass-intersections-study/ |
| 4 | Eastern Planning Initiative | http://campo.tjpdc.org/eastern-planning-initiative/ |
| 5 | Hillsdale Drive | http://www.hillsdaledrive.org/ |
| 6 | TJPDC Transportation | http://tjpdc.org/transportation-planning/ |
| 7 | Environmental Review Reports | Copies are available in both the central Richmond Office and each District Office. They are sent to local residencies within 30 days of any public hearing about the project to which they relate. For additional information on Environmental Review for TIP projects, contact Rick Crofford (VDOT, Culpeper District Assistant Environmental Manager). |

## TIP User's Guide: Understanding the TIP Format

Project information appears for each project that currently receives federal funding through the Six-Year Improvement Program. The information for each of these projects appears in the chart format shown below and is provided to the MPO by VDOT. Terms are listed consistently in the grey boxes, while project-specific details are listed in the white boxes to the right of, or below, each term. Definitions for the numbered terms appear in the corresponding Glossary of Terms table. Project information will appear in the TIP if funding is necessary for miscellaneous follow-up costs (e.g. utility relocation, miscellaneous bill payment, etc.). Projects must be removed from the Six Year Program in order to be removed from the TIP.

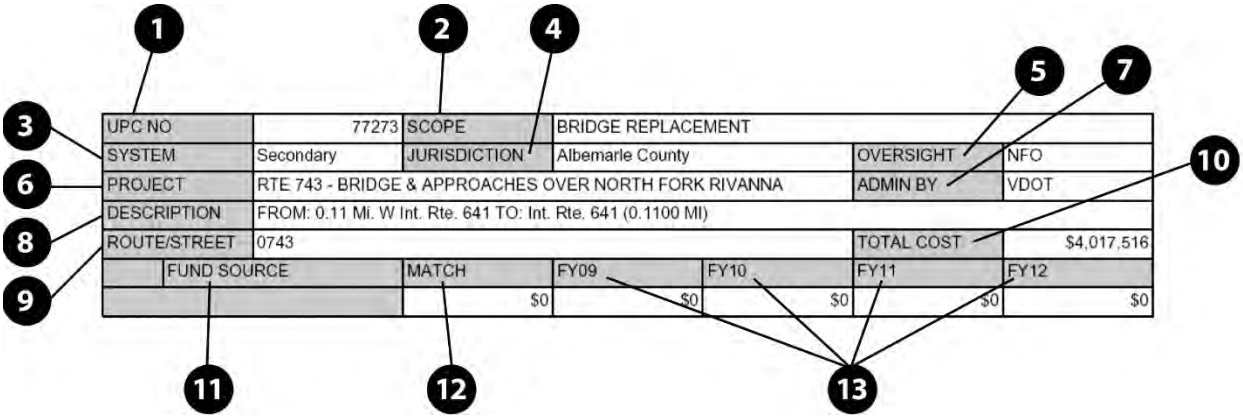


## Glossary of Terms

| | Term | Definition |
|---|---|---|
| 1 | **Universal Project Code (UPC) Number** | Number assigned to each project at its conception, remaining with the project until completion. |
| 2 | **Scope** | Includes notes about the work to be covered by the project. |
| 3 | **System** | Indicates which system, program, or mode of transportation the project falls within. E.g.Interstate, Primary, Secondary, Urban, Rail, Transportation Enhancements, or Miscellaneous. |
| 4 | **Jurisdiction** | The jurisdiction (City of Charlottesville or Albemarle County) in which the project will occur. |
| 5 | **Federal Oversight Indicator (FO or NFO)** | FO: Indicates Federal Oversight in the project construction, contracting, and management.<br>NFO: Indicates No Federal Oversight in the construction, contracting, and management issues, and does not affect the standard environmental review process for transportation projects. All federally funded transportation projects must include the required environmental documents regardless of whether there is federal oversight required. |
| 6 | **Project/Project Phase** | Name of the Project and Phase (i.e. *PE: Preliminary Engineering* - Preliminary field survey, utility location, environmental or historical studies, design drawings, final field inspections and public hearings will be done. This process can take several months to years to complete; *RW: Right of Way* - Negotiations with property owners take place, payments are made, and arrangements with utility companies are finalized to obtain the land necessary for the project; or *CN: Construction* - Project is advertised to prospective contractors for bids. Once the bids are opened and a contract awarded, construction can begin.) |
| 7 | **Admin By** | Entity responsible for the project |
| 8 | **Description** | Limits of the project |
| 9 | **Route/Street** | Local street name |
| 10 | **Total Cost** | The total estimated cost (TO) reflecting the best overall estimate available at the time. Estimated costs begin as rough estimates, usually based on historical data, and are updated at critical stages (e.g. the final field inspection), as plans are more defined. |

<table>
<tr><th></th><th>Term</th><th>Definition</th></tr>
<tr><td>11</td><td>Fund Source<br>All designations except "State" indicate that federal funds are to be used for at least a portion of the project.</td><td>FHWA funding sources are described below:
<table>
<tr><td>APD Appalachian Development</td><td>HPD TEA-21 Priority</td></tr>
<tr><td>APL Appalachian Local Access</td><td>I Interstate</td></tr>
<tr><td>BH Bridge Rehabilitation</td><td>IM Interstate Maintenance</td></tr>
<tr><td>BOND Bonds/Interest</td><td>NHS National Highway System</td></tr>
<tr><td>BR Bridge Replacement</td><td>OC Open Container</td></tr>
<tr><td>CMAQ Congestion Mitigation & Air Quality</td><td>OT Off the Top</td></tr>
<tr><td>DEMO Federal Demonstration</td><td>RO Repeat Offender</td></tr>
<tr><td>DT Dulles Toll Facilities</td><td>RPT Richmond-Petersburg Turnpike Tolls</td></tr>
<tr><td>EN Enhancement</td><td>RS Rail Safety (100% Federal)</td></tr>
<tr><td>FH Forest Highway</td><td>RSTP Regional Surface Transportation Program</td></tr>
<tr><td>FRAN Federal Reimbursement Anticipation Notes</td><td>S State</td></tr>
<tr><td>FTA Federal Transit Authority Grant</td><td>STP Surface Transportation</td></tr>
<tr><td>HES Hazard Elimination Safety (Sec. 152)</td><td>TFRA Toll Facilities Revolving Door</td></tr>
</table></td></tr>
<tr><td>12</td><td>Match</td><td>Dollar amount matched to federally funded project. Most federal fund sources require a match of some sort; most often 20% of the total cost. The match is included in the obligations section for informational purposes. The match can come from local, state or other sources.</td></tr>
<tr><td>13</td><td>Current and Future Obligations</td><td>The amount of funding which is obligated for the indicated phase of work. An obligation represents a commitment from the Federal government to reimburse the state for the Federal share (e.g. 80%) of a project's eligible cost. This commitment occurs when the project is approved and the Federal government executes the project agreement. The funding obligation listed is the dollar amount that a state may spend and expect reimbursement for during each Federal fiscal year.</td></tr>
</table>

**Additional Project Information** Each ungrouped project summary includes additional detail provided by the MPO, the City of Charlottesville, and Albemarle County. This information appears in a small chart beneath the project's cost estimates and obligations, and includes detail describing the project's location, purpose, MPO endorsement status, and environmental review information, including:

| | |
|---|---|
| **Environmental Impact Statement (EIS)** | An Environmental Impact Statement is prepared for projects which are expected to have a significant impact on the environment |
| **Categorical Exclusions (CE)** | Categorical Exclusions apply to projects which will not individually or cumulatively cause a significant environmental impact. Most CEs require minimal administrative review. |
| **Program Categorical Exclusions (PCE)** | Program Categorical Exclusions are pre-determined actions which do not require administration review. |
| **Environmental Assessment (EA)** | An Environmental Assessment is prepared for actions in which the significance of the environmental impact is not clear. |
| **Not Available (NA)** | Not available or not undertaken is when an any of the above have not yet been completed or are not needed. |

# TIP Financial Information

## SYIP Allocations vs. TIP Obligations

The SYIP is an allocation document similar to a capital outlay plan. Allocations are funds that are available in current and previous years (i.e., "the budget") and those forecasted for future years over the period covered in the SYIP. For example, the FY 2015-2020 SYIP became effective on July 1, 2014; at that time, FY 2015 allocations were combined with any remaining previous allocations that were on each project and together, all previous allocations represent the current budget on the project; funds for FY 2016 through FY 2020 are funds projected to be available in each of those years based on the most recent revenue forecast. Allocations come from several sources, including state, federal, and local funds and represent the amount of funding the Commonwealth has set aside to fund the cost of each project.

The TIP is an obligation document. Obligations are not allocations, but instead represent commitments by the federal government to reimburse the state for the federal share of a project's eligible costs. Thus, states do not receive funding in advance of beginning a project or phase; instead, a project or phase is authorized in a federal agreement under which FHWA or FTA commits to reimburse the state for a share of eligible costs. Obligations are identified in the STIP/TIP by project and project phase (i.e., Preliminary Engineering (PE), Right of Way (RW), and Construction (CN)), and are forecasted across a three-year period.

To better understand the relationship between allocations and obligations, consider the allocation as the money in your checking account that you plan to spend; consider the obligations as the checks you plan to write to cover costs incurred. Like balancing a checkbook, a project's obligations should be equal to or less than the amount of funding allocated to it, generally speaking. Since the TIP is an obligation document, it identifies the amount of funding anticipated to be reimbursed by the federal government, while the SYIP is an allocation document that identifies the total amount of funding expected to be expended to deliver the specified projects and programs.

## TIP Financial Plan

MAP-21's planning regulation 23 CFR 450.324(h) specifies the inclusion of a financial plan in the TIP that shows how the projects or project phases identified can reasonably be expected to be implemented with the available public and private revenues identified. TIP projects and phases are required to be consistent with the long-range plan and must be fully funded in the TIP. To the extent that funding is available or is reasonably expected to be available, priority projects and phases have been selected for inclusion in this TIP. The MPO and its member organizations have cooperatively developed financial forecasts for the TIP based on the latest official planning assumptions and estimates of revenue(s) and cost(s). The financial information is given by funding category for the projects listed and expected to be implemented during the four-year period beginning in FY 2018.

Some projects listed in the TIP may show $0 for planned obligations. Possible reasons for this include:

- Project is complete and is awaiting financial closeout;
- Subsequent phases beyond four years;
- Information only, funding being pursued; or
- Project to be funded from [category] group funding

In addition to construction projects, revenue projections have been made for maintaining and operating the region's highway and transit systems during the same four-year period. Funded TIP actions typically include, but are not limited to:

- transportation studies;
- ground transportation system improvement projects (fixed-guide, highway, bicycle, pedestrian, commuter lots, etc);
- public transit systems and services, including the components of coordinated human service mobility plans;
- system maintenance (monitoring, repair and/or replacement of system facilities and support sites; snow removal; mowing; painting; rest area or weigh station sites; etc); and
- system operations (ITS-TSM applications; traffic operations such as signalization, signal coordination, ramp meters, or message signs; roadside assistance; incident management; for the urbanized TMAs, their Congestion Management Process activities; VDOT traffic management centers; bridge-tunnel management; toll road or congestion pricing management; etc).

## Funding Sources

The TIP funding summary, located on page 14, summarizes the revenue amounts estimated and committed for FY 2018-2021 by year and funding source. The tables include expenditures and estimated revenues expected for each funding source, and show that the program is fiscally constrained by year. The summary tables are based on total funds available, which include annual allocations of funds, including any state and local matching dollars. These revenue sources are all reasonably expected to be made available and committed to the project phase during the programmed year of the TIP.

The following provides a general overview of funding programs utilized in the development of the TIP.

***Highway Funding Programs[1]:***

| | |
|---|---|
| **BR/BROS** | ***Bridge Rehabilitation and Replacement*** program provides funding for bridge improvements. Eligibility for funding is based on a rating of bridge condition by VDOT as a candidate for upgrading. |
| **DEMO** | The federal transportation acts include demonstration, priority, pilot, or special interest projects in various Federal-aid highway and appropriations acts. These projects are generically referred to as "demonstration" or "demo" projects, because Congress initiated this practice of providing special funding for these projects to demonstrate some new or innovative construction, financing, or other techniques on specific projects. |
| **EB/MG** | The ***Equity Bonus*** (formerly known as ***Minimum Guarantee)*** ensures that each State receives a specific share of the aggregate funding for major highway programs (Interstate Maintenance, National Highway System, Bridge, Surface Transportation Program, Highway Safety Improvement Program, Congestion Mitigation and Air Quality Improvement, Metropolitan Planning, Appalachian Development Highway System, Recreational Trails, Safe Routes to School, Rail-Highway Grade Crossing, Coordinated Border Infrastructure programs, and Equity Bonus itself, along with High Priority Projects), with every State guaranteed at least a specified percentage of that State's share of contributions to the Highway Account of the Highway Trust Fund. |
| **IM** | ***Interstate Maintenance*** (IM) program provides reconstruction, maintenance, and improvements to the National System of Interstate and Defense Highways. The Commonwealth Transportation Board (CTB) administers these programs. |

[1] A new funding program glossary is under development and will be added into the FY15 to18 TIP once it becomes available.

| | |
|---|---|
| **NHS** | ***National Highway System*** (NHS) projects can be funded only if they are on the National Highway System, which is established by Congress. |
| **RSTP** | ***Regional Surface Transportation Program*** (RSTP) provides funding for a broad range of capacity, operational, and congestion mitigation related improvements. Projects include road widening, rehabilitation, transit capital, research, environmental enhancements, intelligent transportation systems, planning, and others. |
| **SAFETEA-LU** | ***The Safe Accountable, Flexible, and Efficient Transportation Equity Act: A Legacy for Users (SAFETEA-LU)*** is the federal transportation bill that provides federal transportation funding to each state. The SAFETEA-LU funding category refers to funding earmarks that Congress included in the legislation for specific projects. This funding can only be used for the project(s) for which it is earmarked. |
| **STP** | ***Surface Transportation Program*** (STP) can be utilized on any project located on a roadway that is classified higher than a minor collector. Projects eligible for funding under this program include construction, reconstruction, and rehabilitation, and bridge projects on any public road. Local STP funds are designated as L-STP. |
| **Non-Federal** | Any funding that does not come from federal sources is grouped into the non-federal funding category. |
| **EN** | ***Transportation Enhancement*** funds have been made available for bicycle and pedestrian facilities through the Surface Transportation Program of the TEA-21. A 10% set aside from each state's allocation of STP funds must be used for Transportation Enhancement activities. Projects are available for funding on a statewide competition basis for enhancement grants. The Enhancement program includes a set aside for the Roadscapes Program, which provides funding for local jurisdictions to apply for landscaping projects on state and federally maintained rights-of-way. |
| **SRS** | ***Safe Routes to School*** is a competitive grant program to enable and encourage children to safely walk and bicycle to school. Funds can be used for infrastructure improvements and educational programs. |

***Transit Funding Programs:***

| | |
|---|---|
| **Section 5307** | Federal Transit Administration formula grants for transit operating assistance in urbanized areas. |
| **Section 5311** | Federal Transit Administration formula grants transit operating assistance outside urbanized areas. |
| **Section 5317** | Federal Transit Administration funds for Job Access and Reverse Commute grants to provide low-income individuals job access transportation. |
| **Section 5309** | Federal Transit Administration discretionary grant funding for capital assistance for major bus related construction or equipment projects. |
| **Section 5310** | Federal Transit Administration funds for private and non-profit organizations providing mass transportation services for the elderly and disabled. |
| **Non-Federal** | Any funding that does not come from federal sources is grouped into the non-federal funding category. |

## Financial Assumptions

The TIP financial plan is federally required to include only committed and/or reasonably available transportation funding sources. The estimates on funding sources and costs are based on standard financial principles and recent information. The financial estimates for both revenues and costs are given in year of expenditure dollars, and reflect growth and inflation factors. VDOT cost estimates are from the VDOT Project Cost Estimating System. For projects not administered by the state, cost estimates are developed cooperatively through the MPO or responsible local government. Maintenance and construction program financial planning assumptions used for the FY 2018-2021 TIP are consistent with

assumptions and distribution methodology used for the 2040 Long Range Transportation Plan. Financial assumptions include:

> *The language for these assumptions is currently being updated by VDOT's Central Office and is not yet available. While the MPO and VDOT Culpeper District are aware of these assumptions, VDOT's central office is developing universal language that will appear in all TIP documents across the state. Once this language is finalized it will be incorporated into the MPO's FY15 to18 TIP.*

MAP-21 further authorizes the inclusion of certain projects in both the TIPs and the Long Range Plans that have neither the commitment nor the reasonable expectation for federal funding within the time frames of the respective documents but would be regionally important projects if federal funds were available for them. These are called visioning projects and are found at the end of Section II of this document. Their inclusion signals the importance the MPO places on these projects as part of the region's coordinated traffic reduction efforts. Funding for the visioning projects is reasonably expected to come from a combination of federal, state, and local funding programs, contributions and earmarks, developer proffers and cash contributions, and developer-built network connections.

## Transit

Charlottesville Area Transit (CAT) uses the Transportation Improvement Program (TIP) development process of the TJPDC Metropolitan Planning Organization (MPO) to satisfy the public hearing requirements of 49 U.S.C. Section 5307(c). The TIP public notice of public involvement activities and time established for public review and comment on the TIP satisfies the program-of-projects requirements of the Urbanized Area Formula Program.

# Table C: CAMPO Federal Funding Categories Fiscal Constraint by Year (Hwy 2018-2021)

| Funding Source | FFY2018 | | FFY2019 | | FFY2020 | | FFY2021 | | TOTAL | |
|---|---|---|---|---|---|---|---|---|---|---|
| | Projected Obligation Authority | Planned Obligation | Projected Obligation Authority | Planned Obligation | Projected Obligation Authority | Planned Obligation | Projected Obligation Authority | Planned Obligation | Projected Obligation Authority | Planned Obligation |
| Federal | | | | | | | | | | |
| BR/BROS | $0 | $0 | $2,89,597 | 2,892,597 | 0$ | $0 | $0 | $0 | $2,892,597 | $2,892,597 |
| NHS/NHPP | $7,987,798 | $7,987,798 | $4,700,000 | $4,000,000 | $2,151,417 | $2,151,417 | $0 | $0 | $14,839,206 | $14,839,206 |
| STP/STBG | $7,707,153 | $7,707,153 | $3,931,132 | $3,931,132 | $0 | $0 | $0 | $0 | $11,639,285 | $11,639,285 |
| TAP | $920,756 | $920,756 | $0 | $0 | $0 | $0 | $0 | $0 | $920,756 | $920,756 |
| **Subtotal Federal** | **$16,165,698** | **$16,165,698** | **$11,523,729** | **$11,523,729** | **$2,151,417** | **$2,151,417** | **$0** | **S0** | **$30,290,844** | **$30,290,844** |
| Other | | | | | | | | | | |
| Non-Federal | $0 | $0 | $1,460,904 | $1,460,904 | $0 | $0 | $0 | $0 | $1,460,904 | $1,460,904 |
| State Match | $1,009,325 | $1,009,325 | $3,774,104 | $3,774,104 | $537,854 | $537,854 | $0 | $0 | $5,321,208 | $5,321,208 |
| **Subtotal Other** | **$1,009,325** | **$1,009,325** | **$5,235,005** | **$5,235,005** | **$537,854** | **$537,854** | **$0** | **$0** | **$6,782,184** | **$6,782,184** |
| **Total** | **$17,625,023** | **$17,625,023** | **$16,758,734** | **$16,758,734** | **$2,689,271** | **$2,689,271** | **$0** | **$0** | **$37,073,028** | **$37,073,028** |
| | | | | | | | | | | |
| Federal- ACC (1) | | | | | | | | | | |
| NHS/NHPP | $0 | $0 | $5,363,395 | $5,363,395 | $10,623,583 | $10,623,583 | $4,575,910 | $4,575,910 | $20,562,888 | $20,562,888 |
| STP/STBG | $0 | $0 | $12,166,152 | $12,166,152 | $200,588 | $200,588 | $0 | $0 | $12,366,740 | $12,366,740 |
| **Subtotal- Federal ACC (1)** | **$0** | **$0** | **$17,529,547** | **$17,529,547** | **$10,824,171** | **$10,824,171** | **$4,575,910** | **$4,575,910** | **$32,929,628** | **$32,929,628** |
| | | | | | | | | | | |
| Statewide Federal (4) | | | | | | | | | | |
| NHFP | $2,000,000 | $2,000,000 | $0 | $0 | $0 | $0 | $0 | $0 | $2,000,000 | $2,000,000 |
| **Subtotal Statewide Federal (4)** | **$2,000,000** | **$2,000,000** | **$0** | **$0** | **$0** | **$0** | **$0** | **$0** | **$2,000,000** | **$2,000,000** |
| | | | | | | | | | | |
| Maintenance- Federal (5) | | | | | | | | | | |
| STP/STBG | $3,898,121 | $3,898,121 | $4,521,374 | $4,521,374 | $5,726,561 | $5,726,561 | $5,749,586 | $5,749,586 | $19,895,642 | $19,895,642 |
| **Subtotal- Maintenance- Federal (5)** | **$3,898,121** | **$3,898,121** | **$4,521,374** | **$4,521,374** | **$5,726,561** | **$5,726,561** | **$5,749,586** | **$5,749,586** | **$19,895,642** | **$19,895,642** |

1- ACC -- Advance Construction -- Funding Included in Federal Category based on year of AC Conversion.
2- CMAQ/RSTP includes funds for TRANSIT projects.
3- Multiple MPO Category - Funding to be obligated in Multiple MPO Regions.
4- Statewide Category - Funding to be obligated Statewide for projects as identified.
5- Maintenance Projects - Funding to be obligated for maintenance projects as identified.

# Primary Projects

| | | | | | | |
|---|---|---|---|---|---|---|
| UPC NO | | 16160 | SCOPE | New construction roadway | | |
| SYSTEM | | Primary | JURISDICTION | Albemarle | OVERSIGHT | FO |
| PROJECT | | RTE 29 - BYPASS | | | ADMIN BY | VDOT |
| DESCRIPTION | | FROM: 0.7 Miles NORTH ROUTE 250 TO: 0.5 Miles NORTH RIVANNA RIVER (6.2000 MI) | | | | |
| ROUTE/STREET | | 0029 | | | TOTAL COST | $37,492,216 |
| | FUNDING SOURCE | MATCH | FY18 | FY19 | FY20 | FY21 |
| PE | Other | $0 | $346,384 | $0 | $0 | $0 |
| PE AC | Federal - AC | $0 | $2,618,264 | $0 | $0 | $0 |
| RW | Other | $0 | $236,793 | $0 | $0 | $0 |
| RW AC | Federal - AC | $0 | $70,683,337 | $0 | $0 | $0 |
| MPO Notes | | Adjusted on 12/10/2019. Added FY18 money.<br>Adjusted on 29/11/2017. This project is included in the TIP for financial close-out only; the project is not included for construction purposes. | | | | |

| | | | | | | |
|---|---|---|---|---|---|---|
| UPC NO | | 16160 | SCOPE | New construction roadway | | |
| SYSTEM | | Primary | JURISDICTION | Albemarle | OVERSIGHT | FO |
| PROJECT | | RTE 29 - BYPASS | | | ADMIN BY | VDOT |
| DESCRIPTION | | FROM: 0.7 Miles NORTH ROUTE 250 TO: 0.5 Miles NORTH RIVANNA RIVER (6.2000 MI) | | | | |
| ROUTE/STREET | | 0029 | | | TOTAL COST | $37,492,216 |
| | FUNDING SOURCE | MATCH | FY18 | FY19 | FY20 | FY21 |
| | | $0 | $0 | $0 | $0 | $0 |
| MPO Notes | | Adjusted on 29/11/2017. This project is included in the TIP for financial close-out only; the project is not included for construction purposes. | | | | |

**Before Adjustment 13**

| | | | | | | |
|---|---|---|---|---|---|---|
| UPC NO | | 16160 | SCOPE | New construction roadway | | |
| SYSTEM | | Primary | JURISDICTION | Albemarle | OVERSIGHT | FO |
| PROJECT | | RTE 29 - BYPASS | | | ADMIN BY | VDOT |
| DESCRIPTION | | FROM: 0.7 Miles NORTH ROUTE 250 TO: 0.5 Miles NORTH RIVANNA RIVER (6.2000 MI) | | | | |
| ROUTE/STREET | | 0029 | | | TOTAL COST | $111,096,160 |
| | FUNDING SOURCE | MATCH | FY18 | FY19 | FY20 | FY21 |
| PE | Other | $0 | $0 | $0 | $0 | $0 |
| PE AC | Federal -AC | $0 | $0 | $0 | $0 | $0 |
| RW | Other | $0 | $0 | $0 | $0 | $0 |
| RW AC | Federal -AC | $0 | $0 | $0 | $0 | $0 |
| MPO Notes | | This project is included in the TIP for financial close-out only; the project is not included for construction purposes. | | | | |

**Before Adjustment 1**

| UPC NO | | 77383 | SCOPE | Reconstruction w/ Added Capacity | | |
|---|---|---|---|---|---|---|
| SYSTEM | | Primary | JURISDICTION | Albemarle | OVERSIGHT | NFO |
| PROJECT | | RTE 29 - WIDENING & CORRIDOR IMPROVEMENTS | | | ADMIN BY | VDOT |
| DESCRIPTION | | FROM: ROUTE 643 (POLO GROUNDS ROAD) TO: ROUTE 1719 (TOWN CENTER DRIVE) (1.8300 MI) | | | | |
| ROUTE/STREET | | 0029 | | | TOTAL COST | $61,320,819 |
| | FUNDING SOURCE | MATCH | FY18 | FY19 | FY20 | FY21 |
| PE | Federal - AC CONVERSION | $0 | $0 | $9,020,464 | $0 | $0 |
| PE AC | Federal - NHS/NHPP | $0 | $7,987,789 | $0 | $0 | $0 |
| RW | Federal - STP/STBG | $0 | $965,227 | $0 | $0 | $0 |
| CN TOTAL | | $0 | $8,953,016 | $9,020,464 | $0 | $0 |
| CN AC | Federal-AC | $0 | $9,020,464 | $0 | | |
| MPO Notes: | | | | | | |

| UPC NO | | 102419 | SCOPE | New construction roadway | | |
|---|---|---|---|---|---|---|
| SYSTEM | | Primary | JURISDICTION | Albemarle | OVERSIGHT | FO |
| PROJECT | | RTE 29 - BYPASS | | | ADMIN BY | VDOT |
| DESCRIPTION | | FROM: 0.7 Mi. North Route 250 TO: 0.5 Mi. North of Rivanna River (6.2000 MI) | | | | |
| ROUTE/STREET | | 0029 | | | TOTAL COST | $10.600,583 |
| | FUNDING SOURCE | MATCH | FY18 | FY19 | FY20 | FY21 |
| PE AC | Federal-AC | $0 | $3,800,583 | $0 | $0 | $0 |
| MPO Notes | | Adjusted on 12/10/2019<br><br>This project is included in the TIP for financial close-out only; the project is not included for construction purposes. | | | | |

| UPC NO | | 102419 | SCOPE | New construction roadway | | |
|---|---|---|---|---|---|---|
| SYSTEM | | Primary | JURISDICTION | Albemarle | OVERSIGHT | FO |
| PROJECT | | RTE 29 - BYPASS | | | ADMIN BY | VDOT |
| DESCRIPTION | | FROM: 0.7 Mi. North Route 250 TO: 0.5 Mi. North of Rivanna River (6.2000 MI) | | | | |
| ROUTE/STREET | | 0029 | | | TOTAL COST | $10.600,583 |
| | FUNDING SOURCE | MATCH | FY18 | FY19 | FY20 | FY21 |
| PE AC | Federal-AC | $0 | $0 | $0 | $0 | $0 |
| MPO Notes | | This project is included in the TIP for financial close-out only; the project is not included for construction purposes. | | | | |

**Before Adjustment 14**

| | | | | | | |
|---|---|---|---|---|---|---|
| UPC NO | | 106136 | SCOPE | Reconstruct w/ added capacity | | |
| SYSTEM | | Primary | JURISDICTION | Albemarle | OVERSIGHT | FO |
| PROJECT | | US-29 RIO ROAD GRADE SEPARATED INTERSECTION | | | ADMIN BY | VDOT |
| DESCRIPTION | | FROM: ROUTE 851 (DOMINION DRIVE) TO: ROUTE 1417 (WOODBROOK DRIVE) (1.0000 MI) | | | | |
| PROGRAM NOTE | | All funding obligated based on current allocations/estimate | | | | |
| ROUTE/STREET | | Seminole Trail (0029) | | | TOTAL COST | $69,762,168 |
| | FUNDING SOURCE | MATCH | FY18 | FY19 | FY20 | FY21 |
| | | $0 | $0 | $0 | $0 | $0 |
| MPO Notes | | Adjusted 12/10/2019<br><br>Adjust previous planned obligation to take credit for them in the federal fiscal year ending October 31, 2018. There is no new funding request by this adjustment and these adjustments will facilitate the closeout of the project. | | | | |

| | | | | | | |
|---|---|---|---|---|---|---|
| UPC NO | | 106136 | SCOPE | Reconstruct w/ added capacity | | |
| SYSTEM | | Primary | JURISDICTION | Albemarle | OVERSIGHT | FO |
| PROJECT | | US-29 RIO ROAD GRADE SEPARATED INTERSECTION | | | ADMIN BY | VDOT |
| DESCRIPTION | | FROM: ROUTE 851 (DOMINION DRIVE) TO: ROUTE 1417 (WOODBROOK DRIVE) (1.0000 MI) | | | | |
| PROGRAM NOTE | | FFY18-24 STIP Adj - release $21,205 (STP/BG) Prev PE phase; release $1,160,000 (STP/BG) Prev, add $5,901,475 (AC-Other) FFY18 RW phase; release $22,289,245 (NHPP) & $133,952 (STP/BG) Prev, add $2,697,986 (STP/BG) FFY18, add $4,619,659 (NHPP) FFY18 & $6,740,985 (AC-Other) FFY18 CN phase. | | | | |
| ROUTE/STREET | | Seminole Trail (0029) | | | TOTAL COST | $69,762,168 |
| | FUNDING SOURCE | MATCH | FY18 | FY19 | FY20 | FY21 |
| RW AC | Federal-AC Other | $0 | $5,901,475 | $0 | $0 | $0 |
| CN | Federal-NHS/NHPP | $0 | $4,619,659 | $0 | $0 | $0 |
| | Federal-STP/STBG | $674,497 | $2,697,986 | $0 | $0 | $0 |
| **CN TOTAL** | | **$674,497** | **7,317,645** | **$0** | **$0** | **$0** |
| CN AC | Federal-AC Other | $0 | $6,740,985 | | | |
| MPO Notes | | Adjust previous planned obligation to take credit for them in the federal fiscal year ending October 31, 2018. There is no new funding request by this adjustment and these adjustments will facilitate the closeout of the project. | | | | |

**Before Adjustment 15**

| | | | | | | |
|---|---|---|---|---|---|---|
| UPC NO | | 106136 | SCOPE | Reconstruct w/ added capacity | | |
| SYSTEM | | Primary | JURISDICTION | Albemarle | OVERSIGHT | FO |
| PROJECT | | US-29 RIO ROAD GRADE SEPARATED INTERSECTION | | | ADMIN BY | VDOT |
| DESCRIPTION | | FROM: ROUTE 851 (DOMINION DRIVE) TO: ROUTE 1417 (WOODBROOK DRIVE) (1.0000 MI) | | | | |
| PROGRAM NOTE | | All funding obligated based on current allocations/estimate | | | | |
| ROUTE/STREET | | Seminole Trail (0029) | | | TOTAL COST | $69,762,168 |
| | FUNDING SOURCE | MATCH | FY18 | FY19 | FY20 | FY21 |
| | | $0 | $0 | $0 | $0 | $0 |
| MPO Notes | | Project is completed but remains in the TIP for financial close-out. | | | | |

**Before Adjustment 6**

| | | | | | | |
|---|---|---|---|---|---|---|
| UPC NO | | 77273 | SCOPE | Bridge Replacement w/ Added Capacity | | |
| SYSTEM | | Primary | JURISDICTION | Albemarle | OVERSIGHT | NFO |
| PROJECT | | RTE 743 - BRIDGE & APPROACHES OVER NORTH FORK RIVANNA | | | ADMIN BY | VDOT |
| DESCRIPTION | | FROM: 0.073 Mi. W of Rte. 641 TO: 0.011Mi. W. of Rte. 641 (0.0620 MI) | | | | |
| ROUTE/STREET | | ADVANCE MILLS ROAD (0743) | | | TOTAL COST | $10.600,583 |
| | FUNDING SOURCE | MATCH | FY18 | FY19 | FY20 | FY21 |
| RW AC | Federal-AC | $0 | $56 | $0 | $0 | $0 |
| CN AC | Federal-AC | $0 | $1,204 | $0 | $0 | $0 |
| MPO Notes | | | | | | |

| | | | | | | |
|---|---|---|---|---|---|---|
| UPC NO | | 111779 | SCOPE | Bridge Replacement w/o Added Capacity | | |
| SYSTEM | | Secondary | JURISDICTION | Albemarle | OVERSIGHT | NFO |
| PROJECT | | RTE. 702 - BRIDGE REPLACEMENT STR. 6401 | | | ADMIN BY | VDOT |
| DESCRIPTION | | FROM: 0.015 MI. W. MOREY CREEK TO: 0.15 MI. E. MOREY CREEK (0.3000 MI) | | | | |
| ROUTE/STREET | | FONTAINCE AVE EXT (0702) | | | TOTAL COST | $1,900,000 |
| | FUNDING SOURCE | MATCH | FY18 | FY19 | FY20 | FY21 |
| PE | Federal - AC CONVERSION | $0 | $0 | $0 | $0 | $0 |
| PE AC | Federal -AC | $0 | $800,000 | $0 | $0 | $0 |
| RW AC | Federal -AC | $0 | $0 | $0 | $100,000 | $0 |
| CN AC | Federal -AC | $0 | $0 | $0 | $0 | $1,000,000 |
| MPO Notes | | | | | | |

| UPC NO | | 75878 | SCOPE | Reconstruction w/o Added Capacity | | |
|---|---|---|---|---|---|---|
| SYSTEM | | Urban | JURISDICTION | Charlottesville | OVERSIGHT | NFO |
| PROJECT | | # SGR-RTE 20 - BRIDGE REPLACEMENT | | | ADMIN BY | Locally |
| DESCRIPTION | | FFY20-11 STIP ADJ - update based on actual oblig's: release $671,350 (STP) FFY19, release $128,863 (BR) from FFY19, add $636,319 (STP) FFY20 PE; add $731,103 (STP) FFY19 RW; move $112,179 (STP) from FFY19 to FFY20 & add an addit'l $574,872, release $1,126,514 (EB) FFY19, move $1,270,944 (BR) from FFY19 to FFY20 & release $1,142,081, move $6,118,212 (AC-Other) from FFY19 to FFY20 & add an addit'l $210,653, move $6,160,904 (REVSH) from FFY19 to FFY20, add $87 (HIP) FFY20 CN phase. | | | | |
| ROUTE/STREET | | 9TH STREET NE (0020) | | | TOTAL COST | $25,116,510 |
| | FUNDING SOURCE | MATCH | FY18 | FY19 | FY20 | FY21 |
| PE | Federal – STP/STBG | $159,080 | $0 | $598,198 | $636,319 | $0 |
| | Federal – STP/SU | $0 | $0 | $841,643 | $0 | $0 |
| PE Total | | $159,080 | $0 | $1,439,841 | $636,319 | $0 |
| RW | Federal-STP/STBG | $0 | $0 | $1,331,103 | $0 | $0 |
| CN | HB 1887 - SGR | $0 | $0 | $0 | $87 | $0 |
| | Federal- BR | $32,216 | $0 | $0 | $128,863 | $0 |
| | Federal STP/STBG | $171,763 | $0 | $0 | $687,051 | $0 |
| | Other | $6,160,940 | $0 | $0 | $6,160,904 | $0 |
| CN TOTAL | | $6,364,883 | $0 | $0 | $6,976,905 | |
| CN AC | Federal-AC | $0 | $0 | $0 | $1,126,514 | $0 |
| | Federal – AC Other | $0 | $0 | $0 | $6,328,865 | $0 |
| CN AC | | $0 | $0 | $0 | $7,455,379 | $0 |
| MPO Notes | | Adjusted: 4/24/2020<br>Adjusted: 12/10/2019<br>Adjusted: 2/11/19 | | | | |

| UPC NO | | 75878 | SCOPE | Reconstruction w/o Added Capacity | | |
|---|---|---|---|---|---|---|
| SYSTEM | | Urban | JURISDICTION | Charlottesville | OVERSIGHT | NFO |
| PROJECT | | # SGR-RTE 20 - BRIDGE REPLACEMENT | | | ADMIN BY | Locally |
| DESCRIPTION | | FROM: GARRETT STREET/LEVY AVENUE TO: EAST MARKET STREET (0.3000 MI) | | | | |
| ROUTE/STREET | | 9TH STREET NE (0020) | | | TOTAL COST | $14,465,713 |
| | FUNDING SOURCE | MATCH | FY18 | FY19 | FY20 | FY21 |
| RW | Federal-STP/STBG | | $500,000 | $0 | $0 | $0 |
| CN | Federal- BR | | $0 | $774,294 | $0 | $0 |
| | Federal STP/STBG | $280,741 | $0 | $3,931,132 | $0 | $0 |
| | Other | $1,460,904 | $0 | $1,460,904 | $0 | $0 |
| CN TOTAL | | $1,741,645 | $0 | $6,166,330 | $0 | $0 |
| CN AC | Federal-AC | $0 | $0 | $4,976,858 | $0 | $0 |
| MPO Notes | | Adjusted: 12/10/2019<br>Adjusted: 2/11/19 | | | | |

**Before Adjustment 24**

| | | | | | | |
|---|---|---|---|---|---|---|
| UPC NO | | 75878 | SCOPE | Reconstruction w/o Added Capacity | | |
| SYSTEM | | Urban | JURISDICTION | Charlottesville | OVERSIGHT | NFO |
| PROJECT | | # SGR-RTE 20 - BRIDGE REPLACEMENT | | | ADMIN BY | Locally |
| DESCRIPTION | | FROM: GARRETT STREET/LEVY AVENUE TO: EAST MARKET STREET (0.3000 MI) | | | | |
| PROGRAM NOTE | | FFY19-10 STIP ADJ - move $2,361,820 (STP/STBG) from FFY18 to FFY19 & release $250,629, add $128,863 (BR) FY19 PE phase; move $600,000 (STP/STBG) from FFY18 to FFY19 RW phase; release $234,172 (STP/STBG), add an addit'l $3,552 (EB), add an addit'l $200,000 (REVSH), add an addiit'l $496,650 (BR), add an addit'l $1,382,648 (ACOther) FFY19 CN phase. | | | | |
| ROUTE/STREET | | 9TH STREET NE (0020) | | | TOTAL COST | $25,187,399 |
| | FUNDING SOURCE | MATCH | FY18 | FY19 | FY20 | FY21 |
| PE | Federal- BR | $32,216 | $0 | $128,863 | $0 | $0 |
| | Federal-STP/STBG | | $0 | $2,111,191 | $0 | $0 |
| PE TOTAL | | $32,216 | $0 | $2,240,054 | $0 | $0 |
| RW | Federal-STP/STBG | | $0 | $600,000 | $0 | $0 |
| CN | Federal- BR | | $0 | $1,270,944 | $0 | $0 |
| | Federal-EB/MG | $281,629 | $0 | $1,126,514 | $0 | $0 |
| | Federal STP/STBG | | $0 | $112,179 | $0 | $0 |
| | Other | $6,160,904 | $0 | $6,160,904 | $0 | $0 |
| CN TOTAL | | $6,442,533 | $0 | $8,670,541 | $0 | $0 |
| CN AC | Federal-AC | $0 | $0 | $6,118,212 | $0 | $0 |
| MPO Notes | | Adjusted: 2/11/19 | | | | |

**Before Adjustment 16**

| UPC NO | | 75878 | SCOPE | Reconstruction w/ Added Capacity | | |
|---|---|---|---|---|---|---|
| SYSTEM | | Urban | JURISDICTION | Charlottesville | OVERSIGHT | NFO |
| PROJECT | | RTE 20 - BRIDGE REPLACEMENT | | | ADMIN BY | Locally |
| DESCRIPTION | | FROM: GARRETT STREET/LEVY AVENUE TO: EAST MARKET STREET (0.3000 MI) | | | | |
| PROGRAM NOTE | | TIP AMD - add $2,361,820 (STP) FFY18 PE phase; add an addit'l $100,000 (STP) FFY18 RW phase; release $2,461,819 (STP) FFY19, add an addit'l $4,500,000 (REVSH) FFY19, release $241,294 (AC-Other) FFY19 CN phase. | | | | |
| ROUTE/STREET | | 9TH STREET NE (0020) | | | TOTAL COST | $23,465,713 |
| | FUNDING SOURCE | MATCH | FY18 | FY19 | FY20 | FY21 |
| PE | Federal-STP/STBG | | $2,361820 | | | |
| RW | Federal-STP/STBG | $0 | $600,000 | $0 | $0 | $0 |
| CN | Federal-BR | $0 | $0 | $774,294 | $0 | $0 |
| | Federal-STP/STBG | $280,747 | $0 | $1,469,313 | $0 | $0 |
| | Other | $5,960,904 | $0 | $5,960,904 | $0 | $0 |
| CN TOTAL | | $6,241,645 | $0 | $8,204,511 | $0 | $0 |
| CN AC | Federal-AC | $0 | $0 | $4,976,858 | $0 | $0 |
| MPO Notes | | Amended on 11/29/2017 by the MPO Policy Board. | | | | |

**Before Adjustment 8**

| UPC NO | | 75878 | SCOPE | Reconstruction w/ Added Capacity | | |
|---|---|---|---|---|---|---|
| SYSTEM | | Urban | JURISDICTION | Charlottesville | OVERSIGHT | NFO |
| PROJECT | | RTE 20 - BRIDGE REPLACEMENT | | | ADMIN BY | Locally |
| DESCRIPTION | | FROM: GARRETT STREET/LEVY AVENUE TO: EAST MARKET STREET (0.3000 MI) | | | | |
| ROUTE/STREET | | 9TH STREET NE (0020) | | | TOTAL COST | $14,465,713 |
| | FUNDING SOURCE | MATCH | FY18 | FY19 | FY20 | FY21 |
| RW | Federal-STP/STBG | $0 | $500,000 | $0 | $0 | $0 |
| CN | Federal-BR | $0 | $0 | $774,294 | $0 | $0 |
| | Federal-STP/STBG | $280,747 | $0 | $3,931,132 | $0 | $0 |
| | Other | $1,460,904 | $0 | $1,460,904 | $0 | $0 |
| CN TOTAL | | $1,741,645 | $0 | $6,166,330 | $0 | $0 |
| CN AC | Federal-AC | $0 | $0 | $4,976,858 | $0 | $0 |
| MPO Notes | | Amended on 11/29/2017 by the MPO Policy Board. | | | | |

**Before Amendment 1**

| UPC NO | | 85708 | SCOPE | Reconstruct w/ added capacity | | |
|---|---|---|---|---|---|---|
| SYSTEM | | Urban | JURISDICTION | Charlottesville | OVERSIGHT | NFO |
| PROJECT | | RTE. 29 (EMMET STREET) / RTE. 250 BYPASS INTERCHANGE | | | ADMIN BY | VDOT |
| DESCRIPTION | | FROM: 0.123 MI. SOUTH OF RTE 29 / RTE 250 BYPASS INTERCHANGE TO: 0.369 MI. NORTH OF RTE 29 / RTE 250 BYPASS INTERCHANGE (0.4920 MI) | | | | |
| ROUTE/STREET | | Emmet Street (0029) | | | TOTAL COST | $17, 075,000 |
| | FUNDING SOURCE | MATCH | FY18 | FY19 | FY20 | FY21 |
| CN | Federal – STP/STBG | $0 | ($75,000) | $0 | $0 | $0 |
| MPO Notes | | Adjusted 12/10/2019. ADJ 10<br>Adjusted 05/22/2019 | | | | |

| UPC NO | | 85708 | SCOPE | Reconstruct w/ added capacity | | |
|---|---|---|---|---|---|---|
| SYSTEM | | Urban | JURISDICTION | Charlottesville | OVERSIGHT | NFO |
| PROJECT | | RTE. 29 (EMMET STREET) / RTE. 250 BYPASS INTERCHANGE | | | ADMIN BY | VDOT |
| DESCRIPTION | | FROM: 0.123 MI. SOUTH OF RTE 29 / RTE 250 BYPASS INTERCHANGE TO: 0.369 MI. NORTH OF RTE 29 / RTE 250 BYPASS INTERCHANGE (0.4920 MI) | | | | |
| PROGRAM NOTE | | FFY19-14 STIP ADJ - release $49,059 (STP/STBG) FFY19 RW phase; add $49,062 (ACC-STP) FFY19 CN phase. Includes Child UPC 109089 | | | | |
| ROUTE/STREET | | Emmet Street (0029) | | | TOTAL COST | $16,746,700 |
| | FUNDING SOURCE | MATCH | FY18 | FY19 | FY20 | FY21 |
| RW | Federal – STP/STBG | $0 | $0 | ($49,059) | $0 | $0 |
| CN | Federal – AC Conversion | $0 | $0 | $49,062 | $0 | $0 |
| MPO Notes | | Adjusted 05/22/2019 | | | | |

**Before Adjustment 10**

| UPC NO | | 85708 | SCOPE | Reconstruct w/ added capacity | | |
|---|---|---|---|---|---|---|
| SYSTEM | | Urban | JURISDICTION | Charlottesville | OVERSIGHT | NFO |
| PROJECT | | RTE. 29 (EMMET STREET) / RTE. 250 BYPASS INTERCHANGE | | | ADMIN BY | VDOT |
| DESCRIPTION | | FROM: 0.123 MI. SOUTH OF RTE 29 / RTE 250 BYPASS INTERCHANGE TO: 0.369 MI. NORTH OF RTE 29 / RTE 250 BYPASS INTERCHANGE (0.4920 MI) | | | | |
| PROGRAM NOTE | | FFY15 Rollover project to adjust the FFY18 STIP based on STIP Adj. FFY17-09 processed on 01/04/17. Includes Child UPC 109089 | | | | |
| ROUTE/STREET | | Emmet Street (0029) | | | TOTAL COST | $17,075,000 |
| | FUNDING SOURCE | MATCH | FY18 | FY19 | FY20 | FY21 |
| | | $0 | $-75,000 | $0 | $0 | $0 |
| MPO Notes | | Adjusted on 11/29/2017 by the MPO Policy Board. | | | | |

**Before Adjustment 10**

| | | | | | | |
|---|---|---|---|---|---|---|
| UPC NO | | 85708 | SCOPE | Reconstruct w/ added capacity | | |
| SYSTEM | | Urban | JURISDICTION | Charlottesville | OVERSIGHT | NFO |
| PROJECT | | RTE. 29 (EMMET STREET) / RTE. 250 BYPASS INTERCHANGE | | | ADMIN BY | VDOT |
| DESCRIPTION | | FROM: 0.123 MI. SOUTH OF RTE 29 / RTE 250 BYPASS INTERCHANGE TO: 0.369 MI. NORTH OF RTE 29 / RTE 250 BYPASS INTERCHANGE (0.4920 MI) | | | | |
| PROGRAM NOTE | | | | | | |
| ROUTE/STREET | | Emmet Street (0029) | | | TOTAL COST | $17,075,000 |
| | FUNDING SOURCE | MATCH | FY18 | FY19 | FY20 | FY21 |
| | | $0 | $(75,000) | $0 | $0 | $0 |
| MPO Notes | | | | | | |

**Before Adjustment 1**

| | | | | | | |
|---|---|---|---|---|---|---|
| UPC NO | | 109089 | SCOPE | Landscaping/Beautification | | |
| SYSTEM | | Urban | JURISDICTION | Charlottesville | OVERSIGHT | NFO |
| PROJECT | | LANDSCAPING FOR RTE. 29 (EMMET STREET) / RTE. 250 BYPASS INT | | | ADMIN BY | VDOT |
| DESCRIPTION | | FROM: 0.123 MI. SOUTH OF RTE 29 / RTE 250 BYPASS INTERCHANGE TO: 0.369 MI. NORTH OF RTE 29 / RTE 250 BYPASS INTERCHANGE (0.4290 MI) | | | | |
| ROUTE/STREET | | EMMET STREET (0029) | | | TOTAL COST | $75,000 |
| | FUNDING SOURCE | MATCH | FY18 | FY19 | FY20 | FY21 |
| PE | Federal-STP/STBG | $0 | $6,392 | $0 | $0 | $0 |
| CN | Federal-STP/SU | $0 | ($1,342) | $0 | $0 | $0 |
| MPO Notes: | | | | | | |

| | | | | | | |
|---|---|---|---|---|---|---|
| UPC NO | | 14643 | SCOPE | Reconstruction w/ Added Capacity | | |
| SYSTEM | | Urban | JURISDICTION | Charlottesville | OVERSIGHT | NFO |
| PROJECT | | RTE 29 - FONTAINE AVENUE - 3 LANES | | | ADMIN BY | VDOT |
| DESCRIPTION | | FROM: 0.116 KILOMETER WEST WCL CHARLOTTESVILLE TO: JEFFERSON PARK AVENUE (0.7610 KM) | | | | |
| ROUTE/STREET | | FONTAINE AVENUE (0029) | | | TOTAL COST | $1,021,147 |
| | FUNDING SOURCE | MATCH | FY18 | FY19 | FY20 | FY21 |
| PE | Federal-STP/STBG | $23,709 | $94,837 | $0 | $0 | $0 |
| RW | Federal-STP/STBG | $9,408 | $37,630 | $0 | $0 | $0 |
| RW AC | Federal- AC Other | $0 | $22,468 | $0 | $0 | $0 |
| MPO Notes | | | | | | |

| UPC NO | | 60233 | SCOPE | New Construction Roadway | | |
|---|---|---|---|---|---|---|
| SYSTEM | | Urban | JURISDICTION | Charlottesville | SYSTEM | Urban |
| PROJECT | | HILLSDALE DRIVE EXTENDED (3 LANES) | | | ADMIN BY | Locally |
| DESCRIPTION | | FROM: GREENBRIER DRIVE TO: HYDRAULIC ROAD (0.8500 MI) | | | | |
| PROGRAM NOTE | | | | | | |
| ROUTE/STREET | | HILLSDALE DRIVE (U000) | | | TOTAL COST | $29,670,000 |
| | FUNDING SOURCE | MATCH | FY18 | FY19 | FY20 | FY21 |
| PE | Federal-STP/STBG | $341,784 | $1,367,136 | $0 | $0 | $0 |
| RW | Federal- AC CONVERSION | $0 | $0 | $3,509,083 | $0 | $0 |
| | Federal-STP/STBG | $226,085 | $3,512,273 | $0 | $0 | $0 |
| RW TOTAL | | $226,085 | $3,512,273 | $3,509,083 | $0 | $0 |
| RW AC | Federal-AC | $0 | $4,589,784 | | $0 | $0 |
| MPO Notes | | Adjusted on 12/16/2019 | | | | |

| UPC NO | | 60233 | SCOPE | New Construction Roadway | | |
|---|---|---|---|---|---|---|
| SYSTEM | | Urban | JURISDICTION | Charlottesville | SYSTEM | Urban |
| PROJECT | | HILLSDALE DRIVE EXTENDED (3 LANES) | | | ADMIN BY | Locally |
| DESCRIPTION | | FROM: GREENBRIER DRIVE TO: HYDRAULIC ROAD (0.8500 MI) | | | | |
| PROGRAM NOTE | | FFY19-06 STIP ADJ - update based on actual oblig's & current estimate: release $1,404,431 (EB) Prev, remove $825,744 (EB) FFY18, add $879,143 (STP/STBG) FFY19 PE phase; add $2,607,937 (STP/STBG) Prev, add $177,237 (STP/STBG) FFY18, add $455,401 (EB) & $2,480,584 STP/STBG), release $5,841,979 (AC-Other) FFY19 RW phase; release $4,509,083 (AC-STP/STBG) Prev, release $982,588 (EB), add $588,192 (STP/STBG) FFY18, add an addit'l $7,348,255 (AC-Other) FFY19 CN phase. | | | | |
| ROUTE/STREET | | HILLSDALE DRIVE (U000) | | | TOTAL COST | $29,670,000 |
| | FUNDING SOURCE | MATCH | FY18 | FY19 | FY20 | FY21 |
| PE | Federal-STP/STBG | $0 | $0 | $879,143 | $0 | $0 |
| RW | Federal-EB/MG | $113,850 | $0 | $455,401 | $0 | $0 |
| | Federal-STP/STBG | 0 | $177,237 | $2,480,584 | $0 | $0 |
| RW TOTAL | | $113,850 | $177,237 | $2,935,985 | $0 | $0 |
| RW AC | Federal-AC OTHER | $0 | ($966,478) | ($5,841,979) | $0 | $0 |
| CN | Federal STP/SU | $147,048 | $588,192 | $0 | $0 | $0 |
| CN AC | | $0 | $0 | $7,348,255 | $0 | $0 |
| MPO Notes | | Adjusted on 2/6/2019 | | | | |

**Before Adjustment 18**

| UPC NO | | 60233 | SCOPE | New Construction Roadway | | |
|---|---|---|---|---|---|---|
| SYSTEM | | Urban | JURISDICTION | Charlottesville | OVERSIGHT | NFO |
| PROJECT | | HILLSDALE DRIVE EXTENDED (3 LANES) | | | ADMIN BY | Locally |
| DESCRIPTION | | FROM: GREENBRIER DRIVE TO: HYDRAULIC ROAD (0.8500 MI) | | | | |
| PROGRAM NOTE | | FFY18-08 STIP ADJ - release $825,744 (STP/STBG) FFY18 PE phase; release $966,478 (AC-Other) FFY18, release $2,607,934 (STP) Prev RW phase; add $982,588 (STP/STBG) FFY18 CN phase. | | | | |
| ROUTE/STREET | | HILLSDALE DRIVE (U000) | | | TOTAL COST | $29,670,000 |
| | FUNDING SOURCE | MATCH | FY18 | FY19 | FY20 | FY21 |
| PE | Federal-STP/STBG | $0 | ($825,744) | $0 | $0 | $0 |
| RW AC | Federal-AC Other | $0 | ($966,478) | $0 | $0 | $0 |
| CN | Federal-STP/STBG | | $982,588 | $0 | $0 | $0 |
| MPO Notes | | | | | | |

**Before Adjustment 7**

| UPC NO | | 60233 | SCOPE | New Construction Roadway | | |
|---|---|---|---|---|---|---|
| SYSTEM | | Urban | JURISDICTION | Charlottesville | OVERSIGHT | NFO |
| PROJECT | | HILLSDALE DRIVE EXTENDED (3 LANES) | | | ADMIN BY | Locally |
| DESCRIPTION | | FROM: GREENBRIER DRIVE TO: HYDRAULIC ROAD (0.8500 MI) | | | | |
| PROGRAM NOTE | | FFY15 Rollover project to adjust the FFY18 STIP based on STIP Adj. FFY17-32 processed 09/15/17. Project is consistent with the metropolitan TIP. | | | | |
| ROUTE/STREET | | HILLSDALE DRIVE (U000) | | | TOTAL COST | $29,670,000 |
| | FUNDING SOURCE | MATCH | FY18 | FY19 | FY20 | FY21 |
| | | | | | | |
| MPO Notes | | Adjusted on 11/29/17 | | | | |

**Before Adjustment 2**

| UPC NO | | 60233 | SCOPE | New Construction Roadway | | |
|---|---|---|---|---|---|---|
| SYSTEM | | Urban | JURISDICTION | Charlottesville | SYSTEM | Urban |
| PROJECT | | HILLSDALE DRIVE EXTENDED (3 LANES) | | | ADMIN BY | Locally |
| DESCRIPTION | | FROM: GREENBRIER DRIVE TO: HYDRAULIC ROAD (0.8500 MI) | | | | |
| ROUTE/STREET | | HILLSDALE DRIVE (U000) | | | TOTAL COST | $29,670,000 |
| | FUNDING SOURCE | MATCH | FY18 | FY19 | FY20 | FY21 |
| PE | Federal-STP/STBG | $341,784 | $1,367,136 | $0 | $0 | $0 |
| RW | Federal- AC Conversion | $0 | $0 | 3,509,083 | $0 | $0 |
| CN | Federal-STP/STBG | $226,085 | $3,512,273 | $0 | $0 | $0 |
| RW TOTAL | | $226,085 | $3,512,273 | $3,509,083 | $0 | $0 |
| RW AC | Federal-AC | $0 | $4,589,784 | $0 | $0 | $0 |
| MPO Notes | | | | | | |

**Before Adjustment 1**

| UPC NO | | 106138 | SCOPE | New Construction Roadway | | |
|---|---|---|---|---|---|---|
| SYSTEM | | Urban | JURISDICTION | Charlottesville | OVERSIGHT | NFO |
| PROJECT | | HILLSDALE EXTENDED SOUTH (CONSTRUCTION OF NEW ROADWAY) | | | ADMIN BY | VDOT |
| DESCRIPTION | | FROM: HYDRAULIC ROAD TO: HOLIDAY DRIVE | | | | |
| Program Note | | FFY15 Rollover project to adjust the FFY18 STIP based on STIP Adj. FFY17-07 processed 12/16/17. Project is consistent with the metropolitan TIP. Includes Child UPC 110333 | | | | |
| ROUTE/STREET | | Hillsdale Drive (0000) | | | TOTAL COST | 12,000,000 |
| | FUNDING SOURCE | MATCH | FY18 | FY19 | FY20 | FY21 |
| PE | Federal – STP/STBG | $0 | $1,300,000 | $0 | $0 | $0 |
| PE AC | Federal - AC | $0 | $0 | $200,000 | $0 | $0 |
| MPO Notes | | Adjusted on 12/16/2019 | | | | |

| UPC NO | | 106138 | SCOPE | New Construction Roadway | | |
|---|---|---|---|---|---|---|
| SYSTEM | | Urban | JURISDICTION | Charlottesville | OVERSIGHT | NFO |
| PROJECT | | HILLSDALE EXTENDED SOUTH (CONSTRUCTION OF NEW ROADWAY) | | | ADMIN BY | VDOT |
| DESCRIPTION | | FROM: HYDRAULIC ROAD TO: HOLIDAY DRIVE | | | | |
| Program Note | | FFY15 Rollover project to adjust the FFY18 STIP based on STIP Adj. FFY17-07 processed 12/16/17. Project is consistent with the metropolitan TIP. Includes Child UPC 110333 | | | | |
| ROUTE/STREET | | Hillsdale Drive (0000) | | | TOTAL COST | 12,000,000 |
| | FUNDING SOURCE | MATCH | FY18 | FY19 | FY20 | FY21 |
| | | $0 | $0 | $0 | $0 | $0 |
| MPO Notes | | Before adjustment 19<br>Adjusted on 11/29/2017 | | | | |

**Before Adjustment 19**

| UPC NO | | 106138 | SCOPE | New Construction Roadway | | |
|---|---|---|---|---|---|---|
| SYSTEM | | Urban | JURISDICTION | Charlottesville | OVERSIGHT | NFO |
| PROJECT | | HILLSDALE EXTENDED SOUTH (CONSTRUCTION OF NEW ROADWAY) | | | ADMIN BY | VDOT |
| DESCRIPTION | | FROM: HYDRAULIC ROAD TO: HOLIDAY DRIVE | | | | |
| Program Note | | FFY15 Rollover project to adjust the FFY18 STIP based on STIP Adj. FFY17-07 processed 12/16/17. Project is consistent with the metropolitan TIP. Includes Child UPC 110333 | | | | |
| ROUTE/STREET | | Hillsdale Drive (0000) | | | TOTAL COST | 12,000,000 |
| | FUNDING SOURCE | MATCH | FY18 | FY19 | FY20 | FY21 |
| PE | Federal-STP/STBG | $0 | $1,300,000 | $0 | $0 | $0 |
| PE AC | Federal-AC | $0 | $0 | $200,000 | $0 | $0 |
| MPO Notes | | | | | | |

**Before Adjustment 1**

| UPC NO | | 60234 | SCOPE | Reconstruction with added capacity | | |
|---|---|---|---|---|---|---|
| SYSTEM | | Urban | JURISDICTION | Charlottesville | OVERSIGHT | FO |
| PROJECT | | RTE 250 BYPASS - CONSTRUCT INTERCHANGE | | | ADMIN BY | Locally |
| DESCRIPTION | | AT MCINTIRE ROAD/MEADOW CREEK PARKWAY (0.5000 MI) | | | | |
| Program Note | | All funding obligated based on current allocations/estimate | | | | |
| ROUTE/STREET | | ROUTE 250 BYPASS (0250) | | | TOTAL COST | $33,619,157 |
| | FUNDING SOURCE | MATCH | FY18 | FY19 | FY20 | FY21 |
| | | $0 | $0 | $0 | $0 | $0 |
| MPO Notes | | MPO Notes: Project is completed but remains in the TIP for financial close-out. | | | | |

| UPC NO | | 106139 | SCOPE | Reconstruction with added capacity | | |
|---|---|---|---|---|---|---|
| SYSTEM | | Urban | JURISDICTION | Charlottesville | OVERSIGHT | NFO |
| PROJECT | | US-29 HYDRAULIC ROAD GRADE SEPARATED INTERSECTION (PE ONLY) | | | ADMIN BY | VDOT |
| DESCRIPTION | | FROM: ROUTE 250 (IVY ROAD) TO: NCL CITY OF CHARLOTTESVILLE (0.8500 MI) | | | | |
| Program Note | | From: Route 250 (Ivy Road) to: NCL City of Charlottesville (0.8500 MI). | | | | |
| ROUTE/STREET | | SEMINOLE TRAIL (0000) | | | TOTAL COST | $10,000,000 |
| | FUNDING SOURCE | MATCH | FY18 | FY19 | FY20 | FY21 |
| PE | Federal-AC Conversion | $0 | $0 | $5,000,000 | $5,000,000 | $0 |
| PE AC | Federal- AC | $0 | $10,000,000 | $0 | $0 | $0 |
| MPO Notes | | Adjustment 20 12/16/2019 | | | | |

| UPC NO | | 106139 | SCOPE | Reconstruction with added capacity | | |
|---|---|---|---|---|---|---|
| SYSTEM | | Urban | JURISDICTION | Charlottesville | OVERSIGHT | NFO |
| PROJECT | | US-29 HYDRAULIC ROAD GRADE SEPARATED INTERSECTION (PE ONLY) | | | ADMIN BY | VDOT |
| DESCRIPTION | | FROM: ROUTE 250 (IVY ROAD) TO: NCL CITY OF CHARLOTTESVILLE (0.8500 MI) | | | | |
| Program Note | | FFY18-21 STIP ADJ - move $5,000,000 (NHPP) from FFY20 to FFY18 & release $5,000,000 (AC-NHPP) FFY18. | | | | |
| ROUTE/STREET | | SEMINOLE TRAIL (0000) | | | TOTAL COST | $10,000,000 |
| | FUNDING SOURCE | MATCH | FY18 | FY19 | FY20 | FY21 |
| PE | Federal-AC Conversion | $0 | $5,000,000 | $5,000,000 | $0 | $0 |
| PE AC | Federal- AC | $0 | $5,000,000 | $0 | $0 | $0 |
| MPO Notes | | Advance the funding for the PE Phase form FY 20 to FY 18. | | | | |

**Before Adjustment 20**

| | | | | | | |
|---|---|---|---|---|---|---|
| UPC NO | | 106139 | SCOPE | Reconstruction with added capacity | | |
| SYSTEM | | Urban | JURISDICTION | Charlottesville | OVERSIGHT | NFO |
| PROJECT | | US-29 HYDRAULIC ROAD GRADE SEPARATED INTERSECTION (PE ONLY) | | | ADMIN BY | VDOT |
| DESCRIPTION | | FROM: ROUTE 250 (IVY ROAD) TO: NCL CITY OF CHARLOTTESVILLE (0.8500 MI) | | | | |
| Program Note | | | | | | |
| ROUTE/STREET | | SEMINOLE TRAIL (0000) | | | TOTAL COST | $10,000,000 |
| | FUNDING SOURCE | MATCH | FY18 | FY19 | FY20 | FY21 |
| PE | Federal-AC Conversion | $0 | $0 | $5,000,000 | $5,000,000 | $0 |
| PE AC | Federal-AC | $0 | $10,000,000 | $0 | $0 | $0 |
| MPO Notes | | | | | | |

**Before Adjustment 6**

| | | | | | | |
|---|---|---|---|---|---|---|
| UPC NO | | 110381 | SCOPE | | | |
| SYSTEM | | Urban | JURISDICTION | Charlottesville | OVERSIGHT | NFO |
| PROJECT | | #HB2.FY17 EMMET ST. STR SCAPE & INTSECT GARVEE DEBT SERVICE | | | ADMIN BY | VDOT |
| DESCRIPTION | | FROM: ROUTE 250 (IVY ROAD) TO: NCL CITY OF CHARLOTTESVILLE (0.8500 MI) | | | | |
| Program Note | | FFY19-01 STIP ADJ - release $279,849 (AC-NHPP) FFY18, add $272,761 (AC-NHPP), $282,677 (ACC-NHPP) FFY19,$267,618 (ACC-NHPP) FFY20, $374,583 (ACC-NHPP) FFY21. Includes $55,097 GARVEE Debt Service Interest Prev, $279,849 GARVEE Debt Service Interest FY18, $282,677 GARVEE Debt Service Interest FFY19, $267,618 GARVEE Debt Service Interest FFY20, $374,583 GARVEE Debt Service Interest FY21 and $3,248,932 GARVEE Debt Service Interest FFY22-FFY36. Total GARVEE Debt Service Interest $4,508,757. Corresponding CN UPC 109551 which is included in Charlottesville MPO CN: Safety/ITS/Operational Improvements grouping. | | | | |
| ROUTE/STREET | | 0000 | | | TOTAL COST | $4,508,757 |
| | FUNDING SOURCE | MATCH | FY18 | FY19 | FY20 | FY21 |
| PE | Federal-AC Conversion | $0 | | $282,677 | $267,618 | $374,583 |
| | Federal-NHS/NHPP | $0 | $279,849 | $0 | $0 | $0 |
| PE TOTAL | | $0 | $279,849 | $282,677 | $267,618 | $374,583 |
| PE AC | Federal-AC | $0 | $(279,849) | $272,761 | $0 | $0 |
| | | | | | | |
| MPO Notes | | GARVEE Debt Service adjustment | | | | |

| | | | | | | |
|---|---|---|---|---|---|---|
| UPC NO | | 110381 | SCOPE | | | |
| SYSTEM | | Urban | JURISDICTION | Charlottesville | OVERSIGHT | NFO |
| PROJECT | | #HB2.FY17 EMMET ST. STR SCAPE & INTSECT GARVEE DEBT SERVICE | | | ADMIN BY | VDOT |
| DESCRIPTION | | FROM: ROUTE 250 (IVY ROAD) TO: NCL CITY OF CHARLOTTESVILLE (0.8500 MI) | | | | |
| Program Note | | FFY15 Rollover project to adjust the FFY18 STIP based on STIP Adj. #FFY17-30 processed 9/22/17. Project is consistent with the metropolitan TIP. Includes $55,097 GARVEE Debt Service nterest Prev, $279,849 GARVEE Debt Service interest for FFY18, $3,901,049 GARVEE Debt Service interest for FFY19-FFY36. Total GARVEE Debt Service interest $4,235,996. Corresponding CN UPC 109551 which is included in Charlottesville MPO CN: Safety/ITS/Operational Improvements grouping. | | | | |
| ROUTE/STREET | | 0000 | | | TOTAL COST | $4,235,996 |
| | FUNDING SOURCE | MATCH | FY18 | FY19 | FY20 | FY21 |
| PE | Federal-AC Conversion | $0 | $279,849 | $0 | $0 | $0 |
| MPO Notes | | | | | | |

**Before Adjustment 7**

| | | | | | | |
|---|---|---|---|---|---|---|
| UPC NO | | 106139 | SCOPE | Reconstruction with added capacity | | |
| SYSTEM | | Urban | JURISDICTION | Charlottesville | OVERSIGHT | NFO |
| PROJECT | | US-29 HYDRAULIC ROAD GRADE SEPARATED INTERSECTION (PE ONLY) | | | ADMIN BY | VDOT |
| DESCRIPTION | | FROM: ROUTE 250 (IVY ROAD) TO: NCL CITY OF CHARLOTTESVILLE (0.8500 MI) | | | | |
| Program Note | | | | | | |
| ROUTE/STREET | | SEMINOLE TRAIL (0000) | | | TOTAL COST | $10,000,000 |
| | FUNDING SOURCE | MATCH | FY18 | FY19 | FY20 | FY21 |
| PE | Federal-AC Conversion | $0 | $0 | $5,000,000 | $5,000,000 | $0 |
| PE AC | Federal-AC | $0 | $10,000,000 | $0 | $0 | $0 |
| MPO Notes | | | | | | |

| | | | | | | |
|---|---|---|---|---|---|---|
| GROUPING | | Construction: Bridge Rehabilitation/Replacement/Reconstruction | | | | |
| ROUTE/STREET | | 0000 | | | TOTAL COST | $25,674,901 |
| | FUNDING SOURCE | MATCH | FY18 | FY19 | FY20 | FY21 |
| CN | Federal-BR | $529,576 | $0 | $2,118,303 | $0 | $0 |
| MPO Notes | | | | | | |

| | | | | | | |
|---|---|---|---|---|---|---|
| GROUPING | | Construction: Rail | | | | |
| ROUTE/STREET | | | | | TOTAL COST | $1,507,786 |
| | FUNDING SOURCE | MATCH | FY18 | FY19 | FY20 | FY21 |
| | | $0 | $0 | $0 | $0 | $0 |
| MPO Notes | | | | | | |

| GROUPING | | Construction: Safety/ITS/Operational Improvements | | | | |
|---|---|---|---|---|---|---|
| ROUTE/STREET | | 0000 | | | TOTAL COST | $47,215,498 |
| | FUNDING SOURCE | MATCH | FY18 | FY19 | FY20 | FY21 |
| RW | Federal-AC Conversion | $237,500 | $0 | $0 | $950,000 | $0 |
| | Federal-NHS/NHPP | $1,175,000 | $0 | $4,700,000 | $0 | $0 |
| **RW TOTAL** | | **$1,412,500** | **$0** | **$4,700,000** | **$950,000** | |
| RW AC | Federal-AC | $237,500 | $0 | $950,000 | $0 | $0 |
| CN | Federal-AC Conversion | $2,312,373 | $0 | $0 | $4,673,583 | $4,575,910 |
| | Federal-NHS/NHPP | $573,854 | $0 | $0 | $2,151,417 | |
| **CN TOTAL** | | **$2,850,228** | **$0** | **$0** | **$6,825,000** | **$4,575,910** |
| CN AC | Federal-AC | $7500,000 | $0 | $3,000,000 | $0 | $0 |
| MPO Notes | | | | | | |

| GROUPING | | Construction: Transportation Enhancement/Byway/Non-Traditional | | | | |
|---|---|---|---|---|---|---|
| ROUTE/STREET | | 0000 | | | TOTAL COST | $5,872,874 |
| | FUNDING SOURCE | MATCH | FY18 | FY19 | FY20 | FY21 |
| CN | Federal-TAP/F | $230,189 | $920,756 | $0 | $0 | $0 |
| CN AC | Federal-AC | $108,984 | $435,936 | $0 | $0 | $0 |
| MPO Notes | | | | | | |

| MPO | | Charlottesville | | | | |
|---|---|---|---|---|---|---|
| GROUPING | | Maintenance: Preventive Maintenance and System Preservation | | | | |
| Program NOTE | | Funding identified to be obligated districtwide as projects are identified. | | | | |
| ROUTE/STREET | | | | | TOTAL COST | |
| | FUNDING SOURCE | MATCH | FY18 | FY19 | FY20 | FY21 |
| CN | Federal-NHS/NHPP | $0 | $0 | $0 | $2,130,713 | $0 |
| | Federal-STP/STBG | $0 | $1,109,104 | $1,286,434 | $0 | $1,635,888 |
| CN TOTAL | | $0 | $1,109,104 | $1,286,434 | $2,130,713 | $1,635,888 |
| MPO Notes | | TIP AMD to update FFY20 planned obligations based on revised projected revenue. Add $2,130,713 (NHPP)<br>Amendment 3, approved at the January 22, 2020 MPO Policy Board Meeting. | | | | |

| MPO | | Charlottesville | | | | |
|---|---|---|---|---|---|---|
| GROUPING | | Maintenance: Preventive Maintenance and System Preservation | | | | |
| Program NOTE | | Funding identified to be obligated districtwide as projects are identified. | | | | |
| ROUTE/STREET | | | | | TOTAL COST | |
| | FUNDING SOURCE | MATCH | FY18 | FY19 | FY20 | FY21 |
| CN | Federal-STP/STBG | $0 | $1,109,104 | $1,286,434 | $1,629,337 | $1,635,888 |
| MPO Notes | | Adjustment 21 12/16/2019 | | | | |

**Before Amendment 3**

| MPO | Charlottesville |
|---|---|

| GROUPING | | Maintenance: Preventive Maintenance and System Preservation | | | | |
|---|---|---|---|---|---|---|
| Program NOTE | | Funding identified to be obligated districtwide as projects are identified. | | | | |
| ROUTE/STREET | | | | | TOTAL COST | |
| | FUNDING SOURCE | MATCH | FY18 | FY19 | FY20 | FY21 |
| CN | Federal-STP/STBG | $0 | $1,349,537 | $12,485,925 | $0 | $0 |
| MPO Notes | | FFY19-25 STIP Adj - move $26,585 (STP) FFY19 from Statewide Traffic & Safety to Culpeper Preventive MN & System Preservation FFY19 | | | | |

**Before Adjustment 21**

| GROUPING | | Maintenance: Preventive Maintenance and System Preservation | | | | |
|---|---|---|---|---|---|---|
| Program NOTE | | Funding identified to be obligated districtwide as projects are identified. | | | | |
| ROUTE/STREET | | | | | TOTAL COST | |
| | FUNDING SOURCE | MATCH | FY18 | FY19 | FY20 | FY21 |
| CN | Federal-STP/STBG | $0 | $1,349,537 | $12,459,537 | $0 | $0 |
| MPO Notes | | FFY19-20 STIP Adj - move $98,860 (STP) FFY20 from Statewide Preventive MN & System Preservation to Culpeper Preventive MN & System Preservation FFY19 | | | | |

**Before Adjustment 12**

| GROUPING | | Maintenance: Preventive Maintenance and System Preservation | | | | |
|---|---|---|---|---|---|---|
| Program NOTE | | Funding identified to be obligated districtwide as projects are identified. | | | | |
| ROUTE/STREET | | | | | TOTAL COST | |
| | FUNDING SOURCE | MATCH | FY18 | FY19 | FY20 | FY21 |
| CN | Federal-TAP/F | $0 | $1,349,537 | $1,286,434 | $1,629,337 | $1,635,888 |
| MPO Notes | | FFY 18-18 S TIP Adj - add $240,433 (STP) F FY18 from Culpeper MN: P preventive Maintenance for Bridges grouping | | | | |

**Before Adjustment 11**

| GROUPING | | Maintenance: Preventive Maintenance and System Preservation | | | | |
|---|---|---|---|---|---|---|
| Program NOTE | | Funding identified to be obligated districtwide as projects are identified. | | | | |
| ROUTE/STREET | | | | | TOTAL COST | |
| | FUNDING SOURCE | MATCH | FY18 | FY19 | FY20 | FY21 |
| CN | Federal-TAP/F | $0 | $1,109,104 | $1,286,434 | $1,629,337 | $1,635,888 |
| MPO Notes | | | | | | |

**Before Adjustment 12**

| GROUPING | | Maintenance: Preventive Maintenance for Bridges | | | | |
|---|---|---|---|---|---|---|
| Program NOTE | | Funding identified to be obligated districtwide as projects are identified. | | | | |
| ROUTE/STREET | | | | | TOTAL COST | |
| | FUNDING SOURCE | MATCH | FY18 | FY19 | FY20 | FY21 |
| CN | Federal-NHS/NHPP | $0 | $0 | $0 | $1,000,000 | $0 |
| | Federal-STP/STBG | $0 | $2,498,514 | $2,897,990 | $3,076,190 | $3,685,217 |
| CN TOTAL | | $0 | $2,498,514 | $2,897,990 | $4,076,190 | $3,685,217 |
| MPO Notes | | TIP AMD to update FFY20 planned obligations based on revised projected revenue. Add $3,076,190 (STP/STBG) & $1,000,000 (NHPP)<br>Amendment 3, approved at the January 22, 2020 MPO Policy Board Meeting. | | | | |

| GROUPING | | Maintenance: Preventive Maintenance for Bridges | | | | |
|---|---|---|---|---|---|---|
| Program NOTE | | Funding identified to be obligated districtwide as projects are identified. | | | | |
| ROUTE/STREET | | | | | TOTAL COST | |
| | FUNDING SOURCE | MATCH | FY18 | FY19 | FY20 | FY21 |
| CN | Federal-STP/STBG | $0 | $2,498,514 | $2,897,990 | $3,670,459 | $3,685,217 |
| MPO Notes | | Adjustment 22. 12/16/2019 | | | | |

**Before amendment 3**

| GROUPING | | Maintenance: Preventive Maintenance for Bridges | | | | |
|---|---|---|---|---|---|---|
| Program NOTE | | Funding identified to be obligated districtwide as projects are identified. | | | | |
| ROUTE/STREET | | | | | TOTAL COST | |
| | FUNDING SOURCE | MATCH | FY18 | FY19 | FY20 | FY21 |
| CN | Federal-TAP/F | $0 | $2,604,081 | $2,897,990 | $3,670,459 | $3,685,217 |
| MPO Notes | | FFY 18-18 S TIP Adj - add $240,433 (STP) F FY18 from Culpeper MN: P preventive Maintenance and System Preservation Grouping | | | | |

**Before adjustment 22**

| GROUPING | | Preventive Maintenance for Bridges | | | | |
|---|---|---|---|---|---|---|
| Program NOTE | | Funding identified to be obligated districtwide as projects are identified. | | | | |
| ROUTE/STREET | | | | | TOTAL COST | |
| | FUNDING SOURCE | MATCH | FY18 | FY19 | FY20 | FY21 |
| CN | Federal-TAP/F | $0 | $2,258,081 | $2,897,990 | $3,670,459 | $3,685,217 |
| MPO Notes | | FFY 18-18 S TIP Adj - add $346,000 (STP) F FY18 from Culpeper MN: Preventive Maintenance and System Preservation Grouping | | | | |

**Before Adjustment 7**

| GROUPING | | Preventive Maintenance for Bridges | | | | |
|---|---|---|---|---|---|---|
| Program NOTE | | Funding identified to be obligated districtwide as projects are identified. | | | | |
| ROUTE/STREET | | | | | TOTAL COST | |
| | FUNDING SOURCE | MATCH | FY18 | FY19 | FY20 | FY21 |
| CN | Federal-TAP/F | $0 | $2,498,514 | $2,897,990 | $3,670,459 | $3,685,217 |
| MPO Notes | | | | | | |

**Before Adjustment 7**

| GROUPING | | Maintenance: Traffic and Safety Operations | | | | |
|---|---|---|---|---|---|---|
| Program NOTE | | Funding identified to be obligated districtwide as projects are identified. | | | | |
| ROUTE/STREET | | | | | TOTAL COST | |
| | FUNDING SOURCE | MATCH | FY18 | FY19 | FY20 | FY21 |
| CN | Federal-STP/STBG | $0 | $290,503 | $336,950 | $6,096,711 | $428,481 |
| MPO Notes | | TIP AMD to update FFY20 planned obligations based on revised projected revenue. Add $6,096,711 (STP/STBG)<br>Amendment 3, approved at the January 22, 2020 MPO Policy Board Meeting. | | | | |

| GROUPING | | Maintenance: Traffic and Safety Operations | | | | |
|---|---|---|---|---|---|---|
| Program NOTE | | Funding identified to be obligated districtwide as projects are identified. | | | | |
| ROUTE/STREET | | | | | TOTAL COST | |
| | FUNDING SOURCE | MATCH | FY18 | FY19 | FY20 | FY21 |
| CN | Federal-STP/STBG | $0 | $290,503 | $336,950 | $426,765 | $428,481 |
| MPO Notes | | Adjustment 23. 12/16/2019 | | | | |

**Before amendment 3**

| GROUPING | | Maintenance: Traffic and Safety Operations | | | | |
|---|---|---|---|---|---|---|
| Program NOTE | | Funding identified to be obligated districtwide as projects are identified. | | | | |
| ROUTE/STREET | | | | | TOTAL COST | |
| | FUNDING SOURCE | MATCH | FY18 | FY19 | FY20 | FY21 |
| CN | Federal-STP/STBG | $0 | $290,503 | $0 | $0 | $0 |
| MPO Notes | | FFY19-17 STIP Adj- move $336,950 FFY19, $426,765 FFY20 & $428,481 FFY21 (STP) to Preven MN & Sys Preser FFY19 | | | | |

**Before adjustment 23**

| GROUPING | | Maintenance: Traffic and Safety Operations | | | | |
|---|---|---|---|---|---|---|
| Program NOTE | | Funding identified to be obligated districtwide as projects are identified. | | | | |
| ROUTE/STREET | | | | | TOTAL COST | |
| | FUNDING SOURCE | MATCH | FY18 | FY19 | FY20 | FY21 |
| CN | Federal-TAP/F | $0 | $290,503 | $336,950 | $426,765 | $428,481 |
| MPO Notes | | | | | | |

**Before Adjustment 23**

## Transit Summary

| Charlottesville MPO | Previous Funding | FY 2018 | FY 2019 | FY 2020 | FY 2021 | Total FY 2018-2021 | |
|---|---|---|---|---|---|---|---|
| FTA 5307 | $2,151,000 | $2,109,000 | $2,182,000 | $2,459,000 | $2,151,000 | FTA 5307 | $8,901,000 |
| FTA 5309 | $0 | $0 | $0 | $0 | $0 | FTA 5309 | $0 |
| FTA 5310 | $0 | $0 | $0 | $0 | $0 | FTA 5310 | $0 |
| FTA 5311 | $1,185,000 | $3,677,000 | $1,859,000 | $2,009,000 | $4,149,000 | FTA 5311 | $11,926,000 |
| FTA 5314 | $0 | $0 | $0 | $0 | $0 | FTA 5314 | $0 |
| FTA 5337 | $0 | $0 | $0 | $0 | $0 | FTA 5337 | $0 |
| FTA 5339 | $0 | $1,583,000 | $1,402,000 | $697,000 | $2,500,000 | FTA 5339 | $5,950,000 |
| FTA ADTAP | $0 | $0 | $0 | $0 | $0 | FTA ADTAP | $0 |
| FTA DPF | $0 | $0 | $0 | $0 | $0 | FTA DPF | $0 |
| FTA TIGER | $0 | $0 | $0 | $0 | $0 | FTA TIGER | $0 |
| FBD | $0 | $0 | $0 | $0 | $0 | FBD | $0 |
| Flexible STP | $0 | $520,000 | $0 | $532,000 | $3,754,000 | Flexible STP | $4,806,000 |
| CMAQ | $0 | $0 | $0 | $0 | $0 | CMAQ | $0 |
| RSTP | $0 | $0 | $0 | $0 | $0 | RSTP | $0 |
| FHWA TAP | $0 | $0 | $0 | $0 | $0 | FHWA TAP | $0 |
| TIFIA | $0 | $0 | $0 | $0 | $0 | TIFIA | $0 |
| Other Federal | $0 | $0 | $0 | $0 | $0 | Other Federal | $0 |
| State | $2,810,000 | $3,300,000 | $3,340,000 | $3,346,000 | $4,084,000 | State | $14,070,000 |
| Local | $6,259,000 | $5,073,000 | $7,378,000 | $7,979,000 | $7,780,000 | Local | $28,210,000 |
| Revenues | $1,275,000 | $3,662,000 | $1,492,000 | $1,349,000 | $1,402,000 | Revenues | $7,905,000 |
| *Totals* | $13,680,000 | $19,924,000 | $17,653,000 | $18,371,000 | $25,820,000 | | $81,768,000 |

# CAT Summary

| Charlottesville Transit | Previous Funding | FY 2018 | FY 2019 | FY 2020 | FY 2021 | Total FY 2018-2021 | |
|---|---|---|---|---|---|---|---|
| FTA 5307 | $1,615,000 | $1,583,000 | $1,638,000 | $1,845,000 | $1,615,000 | FTA 5307 | $6,681,000 |
| FTA 5309 | $0 | $0 | $0 | $0 | $0 | FTA 5309 | $0 |
| FTA 5310 | $0 | $0 | $0 | $0 | $0 | FTA 5310 | $0 |
| FTA 5311 | $0 | $0 | $0 | $0 | $0 | FTA 5311 | $0 |
| FTA 5314 | $0 | $0 | $0 | $0 | $0 | FTA 5314 | $0 |
| FTA 5337 | $0 | $0 | $0 | $0 | $0 | FTA 5337 | $0 |
| FTA 5339 | $0 | $0 | $0 | $0 | $0 | FTA 5339 | $0 |
| FTA ADTAP | $0 | $0 | $0 | $0 | $0 | FTA ADTAP | $0 |
| FTA DPF | $0 | $0 | $0 | $0 | $0 | FTA DPF | $0 |
| FTA TIGER | $0 | $0 | $0 | $0 | $0 | FTA TIGER | $0 |
| FBD | $0 | $0 | $0 | $0 | $0 | FBD | $0 |
| Flexible STP | $0 | $520,000 | $0 | $532,000 | $3,754,000 | Flexible STP | $4,806,000 |
| CMAQ | $0 | $0 | $0 | $0 | $0 | CMAQ | $0 |
| RSTP | $0 | $0 | $0 | $0 | $0 | RSTP | $0 |
| FHWA TAP | $0 | $0 | $0 | $0 | $0 | FHWA TAP | $0 |
| TIFIA | $0 | $0 | $0 | $0 | $0 | TIFIA | $0 |
| Other Federal | $0 | $0 | $0 | $0 | $0 | Other Federal | $0 |
| State | $1,787,000 | $1,812,000 | $1,946,000 | $2,040,000 | $2,538,000 | State | $8,336,000 |
| Local | $3,516,000 | $1,661,000 | $3,612,000 | $3,338,000 | $3,704,000 | Local | $12,315,000 |
| Revenues | $691,000 | $3,103,000 | $996, 000 | $952,000 | $691,000 | Revenues | $5,742,000 |
| *Totals* | $7,609,000 | $8,679,000 | $8,192,000 | $8,707,000 | $12,302,000 | | $37,880,000 |

| CHARLOTTESVILLE-ALBEMARLE METROPOLITAN PLANNING ORGANIZATION | | | | | | | |
|---|---|---|---|---|---|---|---|
| STIP ID: CAT0001<br>Title: Operating Assistance<br>Recipient: Charlottesville Transit Service | | | | | | | |
| **CAT TIP Projects** | **Previous Funding** | **FY 2018** | **FY 2019** | **FY 2020** | **FY 2021** | **Total FY 2018-2021** | |
| FTA 5307 | $1,615,000 | $1,583,000 | $1,638,000 | $1,845,000 | $1,615,000 | FTA 5307 | **$6,681,000** |
| State | $1,787,000 | $1,708,000 | $1,946,000 | $1,934,000 | $1,787,000 | State | **$7,375,000** |
| Local | $3,516,000 | $1,636,000 | $3,612,000 | $3,311,000 | $3,516,000 | Local | **$12,075,000** |
| Revenues | $691,000 | $3,103,000 | $996,000 | $952,000 | $691,000 | Revenues | **$5,742,000** |
| ***Year Total:*** | **$7,609,000** | **$8,030,000** | **$8,192,000** | **$8,042,000** | **$7,609,000** | ***Total Funds:*** | **$31,873,000** |
| Description: | Adjustment #9: Increase FY20 funding $433K (increase FTA 5307 $230K, increase State $147K, decrease local $205K, increase revenues $261K) in accordance with FY20 draft SYIP. | | | | | | |

| CHARLOTTESVILLE-ALBEMARLE METROPOLITAN PLANNING ORGANIZATION | | | | | | | |
|---|---|---|---|---|---|---|---|
| STIP ID: | **CAT0001** | Title: Operating Assistance | | Recipient: | **Charlottesville Transit Service** | | |
| **CAT TIP Projects** | **Previous Funding** | **FY 2018** | **FY 2019** | **FY 2020** | **FY 2021** | **Total FY 2018-2021** | |
| FTA 5307 | $1,615,000 | $1,583,000 | $1,638,000 | $1,615,000 | $1,615,000 | FTA 5307 | **$6,451,000** |
| State | $1,787,000 | $1,708,000 | $1,946,000 | $1,787,000 | $1,787,000 | State | **$7,228,000** |
| Local | $3,516,000 | $1,636,000 | $3,612,000 | $3,516,000 | $3,516,000 | Local | **$12,280,000** |
| Revenues | $691,000 | $3,103,000 | $996,000 | $691,000 | $691,000 | Revenues | **$5,481,000** |
| ***Year Total:*** | **$7,609,000** | **$8,030,000** | **$8,192,000** | **$7,609,000** | **$7,609,000** | ***Total Funds:*** | **$31,440,000** |
| Description: | Adjustment #3: Increase FY19 funding $583K (increase FTA 5307 $23K, increase State $159K, increase local $96K, increase revenues $305K) in accordance with draft FY19 SYIP. | | | | | | |

| CHARLOTTESVILLE-ALBEMARLE METROPOLITAN PLANNING ORGANIZATION | | | | | | | |
|---|---|---|---|---|---|---|---|
| STIP ID: CAT0002<br>Title: Expansion Rolling Stock<br>Recipient: Charlottesville Transit Service | | | | | | | |
| **CAT TIP Projects** | **Previous Funding** | **FY 2018** | **FY 2019** | **FY 2020** | **FY 2021** | **Total FY 2018-2021** | |
| Flexible STP | | | $0 | | | Flexible STP | **$0** |
| State | | | $0 | | | State | **$0** |
| Local | | | $0 | | | Local | **$0** |
| ***Year Total:*** | **$0** | **$0** | **$0** | **$0** | **$0** | ***Total Funds:*** | **$0** |
| Description: | Adjustment #3: Remove FY19 funding $178K (remove Flexible STP $143 State $28K, local $7K) in accordance with draft FY19 SYIP. | | | | | | |

| CHARLOTTESVILLE-ALBEMARLE METROPOLITAN PLANNING ORGANIZATION | | | | | | | |
|---|---|---|---|---|---|---|---|
| STIP ID: CAT0003<br>Title: Replacement Rolling Stock<br>Recipient: Charlottesville Transit Service | | | | | | | |
| **CAT TIP Projects** | **Previous Funding** | **FY 2018** | **FY 2019** | **FY 2020** | **FY 2021** | **Total FY 2018-2021** | |
| Flexible STP | | $90,000 | $0 | $0 | $3,754,000 | Flexible STP | **$3,844,000** |
| State | | $18,000 | $0 | $0 | $751,000 | State | **$769,000** |
| Local | | $4,000 | $0 | $0 | $188,000 | Local | **$192,000** |
| ***Year Total:*** | **$0** | **$112,000** | **$0** | **$0** | **$4,693,000** | ***Total Funds:*** | **$4,805,000** |
| Description: | Amendment #2: Remove FY20 funding $2,945 ($2,365K Flex STP, State $471K, Local $118K) in accordance with CAT request 01/18/19. | | | | | | |

| CHARLOTTESVILLE-ALBEMARLE METROPOLITAN PLANNING ORGANIZATION | | | | | | | |
|---|---|---|---|---|---|---|---|
| STIP ID: | **CAT0003** | Title: Replacement Rolling Stock | | Recipient: | **Charlottesville Transit Service** | | |
| **CAT TIP Projects** | **Previous Funding** | **FY 2018** | **FY 2019** | **FY 2020** | **FY 2021** | **Total FY 2018-2021** | |
| Flexible STP | | $90,000 | | $2,356,000 | $3,754,000 | Flexible STP | **$6,200,000** |
| State | | $18,000 | | $471,000 | $751,000 | State | **$1,240,000** |
| Local | | $4,000 | | $118,000 | $188,000 | Local | **$310,000** |
| ***Year Total:*** | **$0** | **$112,000** | **$0** | **$2,945,000** | **$4,693,000** | ***Total Funds:*** | **$7,750,000** |
| Description: | Adjustment #3: Remove FY19 funding $513K (remove Flexible STP $410, State $82K, local $21K) in accordance with draft FY19 SYIP. Decrease FY20 funding $516K (decrease Flexible STP $413K, decrease State $83K, decrease local $20K). | | | | | | |

| CHARLOTTESVILLE-ALBEMARLE METROPOLITAN PLANNING ORGANIZATION | | | | | | | |
|---|---|---|---|---|---|---|---|
| STIP ID: CAT0007<br>Title: Passenger Shelters<br>Recipient: Charlottesville Transit Service | | | | | | | |
| **CAT TIP Projects** | **Previous Funding** | **FY 2018** | **FY 2019** | **FY 2020** | **FY 2021** | **Total FY 2018-2021** | |
| Flexible STP | | | | $56,000 | | Flexible STP | **$56,000** |
| State | | | | $11,200 | | State | **$11,200** |
| Local | | | | $2,800 | | Local | **$2,800** |
| ***Year Total:*** | **$0** | **$0** | **$0** | **$70,000** | **$0** | ***Total Funds:*** | **$70,000** |
| Description: | Adjustment #8: Reduce FY20 funding $4K (reduce Flexible STP $3k, State $0.8K, local $0.2K). | | | | | | |

| CHARLOTTESVILLE-ALBEMARLE METROPOLITAN PLANNING ORGANIZATION | | | | | | | |
|---|---|---|---|---|---|---|---|
| STIP ID: | **CAT0007** | Title: Passenger Shelters | | Recipient: | **Charlottesville Transit Service** | | |
| **CAT TIP Projects** | **Previous Funding** | **FY 2018** | **FY 2019** | **FY 2020** | **FY 2021** | **Total FY 2018-2021** | |
| Flexible STP | | | | $59,000 | | Flexible STP | **$59,000** |
| State | | | | $12,000 | | State | **$12,000** |
| Local | | | | $3,000 | | Local | **$3,000** |
| ***Year Total:*** | **$0** | **$0** | **$0** | **$74,000** | **$0** | ***Total Funds:*** | **$74,000** |
| Description: | Adjustment #3: Add FY20 funding $74K (add Flexible STP $59, State $12K, local $3K). | | | | | | |

| CHARLOTTESVILLE-ALBEMARLE METROPOLITAN PLANNING ORGANIZATION | | | | | | | |
|---|---|---|---|---|---|---|---|
| STIP ID: CAT0008<br>Title: Fare Collection Equipment (Fareboxes)<br>Recipient: Charlottesville Transit Service | | | | | | | |
| **CAT TIP Projects** | **Previous Funding** | **FY 2018** | **FY 2019** | **FY 2020** | **FY 2021** | **Total FY 2018-2021** | |
| Flexible STP | | | | | | Flexible STP | **$0** |
| State | | | | | | State | **$0** |
| Local | | | | | | Local | **$0** |
| ***Year Total:*** | **$0** | **$0** | **$0** | **$0** | **$0** | ***Total Funds:*** | **$0** |
| Description: | | | | | | | |

| CHARLOTTESVILLE-ALBEMARLE METROPOLITAN PLANNING ORGANIZATION | | | | | | | |
|---|---|---|---|---|---|---|---|
| STIP ID: CAT0009<br>Title: Purchase Support Vehicles<br>Recipient: Charlottesville Transit Service | | | | | | | |
| **CAT TIP Projects** | **Previous Funding** | **FY 2018** | **FY 2019** | **FY 2020** | **FY 2021** | **Total FY 2018-2021** | |
| Flexible STP | | $19,000 | | | | Flexible STP | **$19,000** |
| State | | $4,000 | | | | State | **$4,000** |
| Local | | $1,000 | | | | Local | **$1,000** |
| ***Year Total:*** | **$0** | **$24,000** | **$0** | **$0** | **$0** | ***Total Funds:*** | **$24,000** |
| Description: | | | | | | | |

| CHARLOTTESVILLE-ALBEMARLE METROPOLITAN PLANNING ORGANIZATION | | | | | | | |
|---|---|---|---|---|---|---|---|
| STIP ID: CAT0011<br>Title: Purchase Shop Equipment<br>Recipient: Charlottesville Transit Service | | | | | | | |
| **CAT TIP Projects** | **Previous Funding** | **FY 2018** | **FY 2019** | **FY 2020** | **FY 2021** | **Total FY 2018-2021** | |
| Flexible STP | | | | | | Flexible STP | **$0** |
| State | | | | | | State | **$0** |
| Local | | | | | | Local | **$0** |
| ***Year Total:*** | **$0** | **$0** | **$0** | **$0** | **$0** | ***Total Funds:*** | **$0** |
| Description: | | | | | | | |

| CHARLOTTESVILLE-ALBEMARLE METROPOLITAN PLANNING ORGANIZATION | | | | | | | |
|---|---|---|---|---|---|---|---|
| STIP ID: CAT0012<br>Title: Purchase Vehicle Locator System<br>Recipient: Charlottesville Transit Service | | | | | | | |
| **CAT TIP Projects** | **Previous Funding** | **FY 2018** | **FY 2019** | **FY 2020** | **FY 2021** | **Total FY 2018-2021** | |
| State | | | | | | State | **$0** |
| Local | | | | | | Local | **$0** |
| ***Year Total:*** | **$0** | **$0** | **$0** | **$0** | **$0** | ***Total Funds:*** | **$0** |
| Description: | | | | | | | |

| CHARLOTTESVILLE-ALBEMARLE METROPOLITAN PLANNING ORGANIZATION | | | | | | | |
|---|---|---|---|---|---|---|---|
| STIP ID: CAT0014<br>Title: Purchase Misc Equipment<br>Recipient: Charlottesville Transit Service | | | | | | | |
| **CAT TIP Projects** | **Previous Funding** | **FY 2018** | **FY 2019** | **FY 2020** | **FY 2021** | **Total FY 2018-2021** | |
| Flexible STP | | | | | | Flexible STP | **$0** |
| State | | | | | | State | **$0** |
| Local | | | | | | Local | **$0** |
| ***Year Total:*** | **$0** | **$0** | **$0** | **$0** | **$0** | ***Total Funds:*** | **$0** |
| Description: | | | | | | | |

| CHARLOTTESVILLE-ALBEMARLE METROPOLITAN PLANNING ORGANIZATION | | | | | | | |
|---|---|---|---|---|---|---|---|
| STIP ID: CAT0016<br>Title: JARC Project- CTS Night Service<br>Recipient: Charlottesville Transit Service | | | | | | | |
| **CAT TIP Projects** | **Previous Funding** | **FY 2018** | **FY 2019** | **FY 2020** | **FY 2021** | **Total FY 2018-2021** | |
| JARC | | | | | | JARC | **$0** |
| State | | | | | | State | **$0** |
| Local | | | | | | Local | **$0** |
| Revenues | | | | | | Revenues | **$0** |
| ***Year Total:*** | **$0** | **$0** | **$0** | **$0** | **$0** | ***Total Funds:*** | **$0** |
| Description: | | | | | | | |

| CHARLOTTESVILLE-ALBEMARLE METROPOLITAN PLANNING ORGANIZATION | | | | | | | |
|---|---|---|---|---|---|---|---|
| STIP ID: CAT0017<br>Title: Purchase Surveillance/Security Equipment<br>Recipient: Charlottesville Transit Service | | | | | | | |
| **CAT TIP Projects** | **Previous Funding** | **FY 2018** | **FY 2019** | **FY 2020** | **FY 2021** | **Total FY 2018-2021** | |
| Flexible STP | | | | | | Flexible STP | |
| State | | | | | | State | |
| Local | | | | | | Local | |
| ***Year Total:*** | **$0** | **$0** | **$0** | **$0** | **$0** | ***Total Funds:*** | **$0** |
| Description: | Amendment 3, Add CAT0019 and transfer $595,000 from CAT 0017 to CAT0019 in accordance with CAT request approved January 22, 2020. | | | | | | |

| STIP ID: | **CAT0017** | Title: Purchase Surveillance/Security Equipment | | Recipient: | **Charlottesville Transit Service** | | |
|---|---|---|---|---|---|---|---|
| Flexible STP | | | | $476,000 | | Flexible STP | **$476,000** |
| State | | | | $95,200 | | State | **$95,200** |
| Local | | | | $23,800 | | Local | **$23,800** |
| ***Year Total:*** | **$0** | **$0** | **$0** | **$595,000** | **$0** | ***Total Funds:*** | **$595,000** |
| Description: | Adjustment #8: Increase FY20 funding $70 ($56k Flex STP, $ 11.2K State, $ 28K) in accordance with CAT request 01/18/19. | | | | | | |

| STIP ID: | **CAT0017** | Title: Purchase Surveillance/Security Equipment | | Recipient: | **Charlottesville Transit Service** | | |
|---|---|---|---|---|---|---|---|
| Flexible STP | | | | $420,000 | | Flexible STP | **$420,000** |
| State | | | | $84,000 | | State | **$84,000** |
| Local | | | | $21,000 | | Local | **$21,000** |
| ***Year Total:*** | **$0** | **$0** | **$0** | **$525,000** | **$0** | ***Total Funds:*** | **$525,000** |
| Description: | | | | | | | |

| **CHARLOTTESVILLE-ALBEMARLE METROPOLITAN PLANNING ORGANIZATION** | | | | | | | |
|---|---|---|---|---|---|---|---|
| STIP ID: CAT0018<br>Title: Purchase Replacement Trolley<br>Recipient: Charlottesville Transit Service | | | | | | | |
| **CAT TIP Projects** | **Previous Funding** | **FY 2018** | **FY 2019** | **FY 2020** | **FY 2021** | **Total FY 2018-2021** | |
| Flexible STP | | $411,000 | | | | Flexible STP | **$411,000** |
| State | | $82,000 | | | | State | **$82,000** |
| Local | | $20,000 | | | | Local | **$20,000** |
| ***Year Total:*** | **$0** | **$513,000** | **$0** | **$0** | **$0** | ***Total Funds:*** | **$513,000** |
| Description: | | | | | | | |

| **CHARLOTTESVILLE-ALBEMARLE METROPOLITAN PLANNING ORGANIZATION** | | | | | | | |
|---|---|---|---|---|---|---|---|
| STIP ID: CAT0019<br>Title: acquire Automatic Passenger Counters<br>Recipient: Charlottesville Transit Service | | | | | | | |
| **CAT TIP Projects** | **Previous Funding** | **FY 2018** | **FY 2019** | **FY 2020** | **FY 2021** | **Total FY 2018-2021** | |
| Flexible STP | | | | $476,000 | | Flexible STP | **$476,000** |
| State | | | | $95,200 | | State | **$95,200** |
| Local | | | | $23,800 | | Local | **$23,800** |
| ***Year Total:*** | **$0** | **$0** | **$0** | **$595,000** | **$0** | ***Total Funds:*** | **$595,000** |
| Description: | Added as a result of amendment 3 on January 22, 2020 | | | | | | |

# JAUNT Summary

| JAUNT, Inc. | Previous Funding | FY 2018 | FY 2019 | FY 2020 | FY 2021 | Total FY 2018-2021 | |
|---|---|---|---|---|---|---|---|
| FTA 5307 | $536,000 | $526,000 | $544,000 | $614,000 | $536,000 | FTA 5307 | $2,220,00 |
| FTA 5309 | $0 | $0 | $0 | $0 | $0 | FTA 5309 | $0 |
| FTA 5310 | $0 | $0 | $0 | $0 | $0 | FTA 5310 | $0 |
| FTA 5311 | $1,185,000 | $3,677,000 | $2,091,000 | $2,009,000 | $4,149,000 | FTA 5311 | $11,926,000 |
| FTA 5314 | $0 | $0 | $0 | $0 | $0 | FTA 5314 | $0 |
| FTA 5337 | $0 | $0 | $0 | $0 | $0 | FTA 5337 | $0 |
| FTA 5339 | $0 | $1,583,000 | $1,170,000 | $697,000 | $2,500,000 | FTA 5339 | $5,950,000 |
| FTA ADTAP | $0 | $0 | $0 | $0 | $0 | FTA ADTAP | $0 |
| FTA DPF | $0 | $0 | $0 | $0 | $0 | FTA DPF | $0 |
| FTA TIGER | $0 | $0 | $0 | $0 | $0 | FTA TIGER | $0 |
| FBD | $0 | $0 | $0 | $0 | $0 | FBD | $0 |
| Flexible STP | $0 | $0 | $0 | $0 | $0 | Flexible STP | $0 |
| CMAQ | $0 | $0 | $0 | $0 | $0 | CMAQ | $0 |
| RSTP | $0 | $0 | $0 | $0 | $0 | RSTP | $0 |
| FHWA TAP | $0 | $0 | $0 | $0 | $0 | FHWA TAP | $0 |
| TIFIA | $0 | $0 | $0 | $0 | $0 | TIFIA | $0 |
| Other Federal | $0 | $0 | $0 | $0 | $0 | Other Federal | $0 |
| State | $1,023,000 | $1,488,000 | $1,394,000 | $1,306,000 | $1,546,000 | State | $5,734,000 |
| Local | $2,743,000 | $3,412,000 | $3,766,000 | $4,641,000 | $4,076,000 | Local | $15,895,000 |
| Revenues | $584,000 | $559,000 | $496,000 | $397,000 | $711,000 | Revenues | $2,163,000 |
| *Totals* | $6,071,000 | $11,245,000 | $9,461,000 | $9,664,000 | $13,518,000 | | $43,888,000 |

| JAUNT TIP Projects | Previous Funding | FY 2018 | FY 2019 | FY 2020 | FY 2021 | Total FY 2018-2021 | |
|---|---|---|---|---|---|---|---|
| **CHARLOTTESVILLE-ALBEMARLE METROPOLITAN PLANNING ORGANIZATION** | | | | | | | |
| STIP ID: | **JNT0001** | Title: Operating Assistance | | Recipient: | **JAUNT, Inc.** | | |
| FTA 5307 | $536,000 | $526,000 | $544,000 | $614,000 | $536,000 | FTA 5307 | **$2,220,000** |
| FTA 5311 | $1,185,000 | $1,274,000 | $1,203,000 | $1,985,000 | $1,185,000 | FTA 5311 | **$5,647,000** |
| State | $1,023,000 | $946,000 | $985,000 | $1,162,000 | $1,023,000 | State | **$4,116,000** |
| Local | $2,743,000 | $3,276,000 | $3,662,000 | $4,605,000 | $3,946,000 | Local | **$15,489,000** |
| Revenues | $584,000 | $559,000 | $496,000 | $397,000 | $711,000 | Revenues | **$2,163,000** |
| ***Year Total:*** | **$6,071,000** | **$6,581,000** | **$6,890,000** | **$8,763,000** | **$7,401,000** | ***Total Funds:*** | **$29,635,000** |
| Description: | Adjustment #9: Increase FY20 funding $1,646K (increase FTA 5307 $78K, increase FTA 5311 $800K, increase State $139K, increase local $909K, decrease revenues $280K) in accordance with FY20 draft SYIP. | | | | | | |
| STIP ID: | **JNT0001** | Title: Operating Assistance | | Recipient: | **JAUNT, Inc.** | | |
| FTA 5307 | $536,000 | $526,000 | $544,000 | $536,000 | $536,000 | FTA 5307 | **$2,142,000** |
| FTA 5311 | $1,185,000 | $1,274,000 | $1,203,000 | $1,185,000 | $1,185,000 | FTA 5311 | **$4,847,000** |
| State | $1,023,000 | $946,000 | $985,000 | $1,023,000 | $1,023,000 | State | **$3,977,000** |
| Local | $2,743,000 | $3,276,000 | $3,662,000 | $3,696,000 | $3,946,000 | Local | **$14,580,000** |
| Revenues | $584,000 | $559,000 | $496,000 | $677,000 | $711,000 | Revenues | **$2,443,000** |
| ***Year Total:*** | **$6,071,000** | **$6,581,000** | **$6,890,000** | **$7,117,000** | **$7,401,000** | ***Total Funds:*** | **$27,989,000** |
| Description:<br><br>**Before Adjustment #9** | Adjustment #3: FY18: Add $526K FTA 5307, decrease FTA 5311 $526K, increase State $5K, decrease local $5K. No change to total funding. Increase FY19 funding $47K (increase FTA 5307 $8K, increase FTA 5311 $18K, decrease State $38K, increase local $178K, decrease revenues $119K) in accordance with draft FY19 SYIP. | | | | | | |
| STIP ID: | **JNT0002** | Title: Replacement Rolling Stock | | Recipient: | **JAUNT, Inc.** | | |
| FTA 5311 | | $1,278,000 | $213,000 | | $2,848,000 | FTA 5311 | **$4,339,000** |
| FTA 5339 | | $1,278,000 | $1,170,000 | $697,000 | $2,151,000 | FTA 5339 | **$5,296,000** |
| Flexible STP | | | | | | Flexible STP | |
| State | | $256,000 | $276,000 | $139,000 | $430,000 | State | **$1,101,000** |
| Local | | $64,000 | $69,000 | $35,000 | $107,000 | Local | **$275,000** |
| ***Year Total:*** | **$0** | **$2,876,000** | **$1,728,000** | **$871,000** | **$5,536,000** | ***Total Funds:*** | **$11,011,000** |
| Description: | Adjustment #9: Move FY20 funding $2,240K to FY21 (move FTA 5311 $1,383K, FTA 5339 $686K, State $137K, local $34K). | | | | | | |

| STIP ID: | **JNT0002** | Title: Replacement Rolling Stock | | Recipient: | **JAUNT, Inc.** | | |
|---|---|---|---|---|---|---|---|
| FTA 5311 | | $1,278,000 | $213,000 | $1,383,000 | $1,465,000 | FTA 5311 | **$4,339,000** |
| FTA 5339 | | $1,278,000 | $1,170,000 | $1,383,000 | $1,465,000 | FTA 5311 | **$5,296,000** |
| Flexible STP | | | | | | Flexible STP | |
| State | | $256,000 | $276,000 | $276,000 | $293,000 | State | **$1,101,000** |
| Local | | $64,000 | $69,000 | $69,000 | $73,000 | Local | **$275,000** |
| ***Year Total:*** | **$0** | **$2,876,000** | **$1,728,000** | **$3,111,000** | **$3,296,000** | ***Total Funds:*** | **$11,011,000** |
| Description: | Adjustment #3: Increase FY19 funding $66K (add FTA 5311 $213K, decrease FTA 5339 $160K, increase State $10K, increase local $3K) in accordance with draft FY19 SYIP. | | | | | | |

| STIP ID: | **JNT0006** | Title: ADP Hardware | | | Recipient: | **JAUNT, Inc.** | |
|---|---|---|---|---|---|---|---|
| FTA 5311 | | $80,000 | $52,000 | | $100,000 | FTA 5311 | **$232,000** |
| Flexible STP | | | | | | Flexible STP | |
| State | | $16,000 | $10,000 | | $20,000 | State | **$46,000** |
| Local | | $4,000 | $3,000 | | $5,000 | Local | **$12,000** |
| ***Year Total:*** | **$0** | **$100,000** | **$65,000** | | **$125,000** | ***Total Funds:*** | **$290,000** |
| Description: | Adjustment #9: Remove FY20 funding $100K (remove FTA 5311 $80K, State $16K, local $4K). No funding in FY20 draft SYIP. | | | | | | |

| STIP ID: | **JNT0006** | Title: ADP Hardware | | Recipient: | **JAUNT, Inc.** | | |
|---|---|---|---|---|---|---|---|
| FTA 5311 | | $80,000 | $52,000 | $80,000 | $100,000 | FTA 5311 | **$312,000** |
| Flexible STP | | | | | | Flexible STP | **$0** |
| State | | $16,000 | $10,000 | $16,000 | $20,000 | State | **$62,000** |
| Local | | $4,000 | $3,000 | $4,000 | $5,000 | Local | **$16,000** |
| ***Year Total:*** | **$0** | **$100,000** | **$65,000** | **$100,000** | **$125,000** | ***Total Funds:*** | **$390,000** |
| Description: **Before Adjustment #9** | Adjustment #3: Decrease FY19 funding $365K (decrease FTA 5311 $292K, decrease State $59K, decrease local $14K) in accordance with draft FY19 SYIP. | | | | | | |

| STIP ID: | **JNT0008** | Title: New Freedom Program | | | Recipient: | **JAUNT, Inc.** | |
|---|---|---|---|---|---|---|---|
| FTA 5310 | | | | | | FTA 5310 | **$0** |
| State | | | | | | State | **$0** |
| Local | | | | | | Local | **$0** |
| Revenues | | | | | | Revenues | **$0** |
| ***Year Total:*** | **$0** | **$0** | **$0** | **$0** | **$0** | ***Total Funds:*** | **$0** |
| Description: | | | | | | | |

| | | | | | | | |
|---|---|---|---|---|---|---|---|
| STIP ID: | **JNT0009** | Title: ADP Software | | | Recipient: | **JAUNT, Inc.** | |
| FTA 5311 | | $12,000 | $0 | | $16,000 | FTA 5311 | **$28,000** |
| Flexible STP | | | | | | Flexible STP | **$0** |
| State | | $2,000 | $0 | | $3,000 | State | **$5** |
| Local | | $1,000 | $0 | | $1,000 | Local | **$2,000** |
| ***Year Total:*** | **$0** | **$15,000** | **$0** | **$0** | **$20,000** | ***Total Funds:*** | **$35,000** |
| Description: | Adjustment #9: Remove FY20 funding $15K (remove FTA 5311 $12K, State $2K, local $1K). No funding in FY20 draft SYIP. | | | | | | |
| STIP ID: | **JNT0009** | Title: ADP Software | | Recipient: | **JAUNT, Inc.** | | |
| FTA 5311 | | $12,000 | | $12,000 | $16,000 | FTA 5311 | **$40,000** |
| Flexible STP | | | | | | Flexible STP | **$0** |
| State | | $2,000 | | $2,000 | $3,000 | State | **$7,000** |
| Local | | $1,000 | | $1,000 | $1,000 | Local | **$3,000** |
| ***Year Total:*** | **$0** | **$15,000** | **$0** | **$15,000** | **$20,000** | ***Total Funds:*** | **$50,000** |
| Description: | Adjustment #3: Remove FY19 funding $30K (remove FTA 5311 $24K, State $5K, local $1K) in accordance with draft FY19 SYIP. | | | | | | |
| STIP ID: | **JNT0010** | Title: Communications System | | | Recipient: | **JAUNT, Inc.** | |
| FTA 5311 | | $28,000 | $16,000 | | | FTA 5311 | **$44,000** |
| Flexible STP | | | | | | Flexible STP | **$0** |
| State | | $6,000 | $3,000 | | | State | **$9,000** |
| Local | | $1,000 | $1,000 | | | Local | **$2,000** |
| ***Year Total:*** | **$0** | **$35,000** | **$20,000** | **$0** | **$0** | ***Total Funds:*** | **$55,000** |
| Description: | Adjustment #3: Decrease FY19 funding $105K (decrease FTA 5311 $84K, decrease State $17K, decrease local $4K) in accordance with draft FY19 SYIP. | | | | | | |
| STIP ID: | **JNT0012** | Title: Rehab Renovation Facility | | | Recipient: | **JAUNT, Inc.** | |
| FTA 5311 | | $560,000 | $82,000 | | | FTA 5311 | **$642,000** |
| Flexible STP | | $0 | $0 | | | Flexible STP | **$0** |
| State | | $112,000 | $16,000 | | | State | **$128,000** |
| Local | | $28,000 | $4,000 | | | Local | **$32,000** |
| ***Year Total:*** | **$0** | **$700,000** | **$102,000** | **$0** | **$0** | ***Total Funds:*** | **$802,000** |
| Description: | Adjustment #3: Add funding for FY19 $102K (add FTA 5311 $82K, State $16K, local $4K) per FY19 draft SYIP. | | | | | | |
| STIP ID: | **JNT0013** | Title: Rehab/Rebuild Buses | | | Recipient: | **JAUNT, Inc.** | |
| FTA 5311 | | | | | | FTA 5311 | **$0** |
| Flexible STP | | | | | | Flexible STP | **$0** |
| State | | | | | | State | **$0** |
| Local | | | | | | Local | **$0** |
| ***Year Total:*** | **$0** | **$0** | **$0** | **$0** | **$0** | ***Total Funds:*** | **$0** |
| Description: | | | | | | | |
| STIP ID: | **JNT0014** | Title: Surveillance/Security Equipment | | | Recipient: | **JAUNT, Inc.** | |

**Before Adjustment #9**

| | | | | | | | |
|---|---|---|---|---|---|---|---|
| FTA 5311 | | | $220,000 | | | FTA 5311 | **$220,000** |
| Flexible STP | | | | | | | |
| State | | | $44,000 | | | State | **$44,000** |
| Local | | | $11,000 | | | Local | **$11,000** |
| ***Year Total:*** | **$0** | **$0** | **$275,000** | **$0** | **$0** | ***Total Funds:*** | **$275,000** |
| Description: | Adjustment #3: Add funding for FY19 $275K (add FTA 5311 $220K, State $44K, local $11K) per FY19 draft SYIP. | | | | | | |
| STIP ID: | **JNT0015** | Title: Support Vehicles | | Recipient: | **JAUNT, Inc.** | | |
| FTA 5311 | | $24,000 | | $24,000 | | FTA 5311 | **$48,000** |
| Flexible STP | | $0 | | $0 | | Flexible STP | **$0** |
| State | | $5,000 | | $5,000 | | State | **$10,000** |
| Local | | $1,000 | | $1,000 | | Local | **$2,000** |
| ***Year Total:*** | **$0** | **$30,000** | **$0** | **$30,000** | **$0** | ***Total Funds:*** | **$60,000** |
| Description: | Adjustment #9: Decrease FY20 funding $10K (decrease FTA 5311 $8K, State $1K, local $1K) in accordance with FY20 draft SYIP. | | | | | | |
| STIP ID: | **JNT0015** | Title: Support Vehicles | | Recipient: | **JAUNT, Inc.** | | |
| FTA 5311 | | $24,000 | | $32,000 | | FTA 5311 | **$56,000** |
| Flexible STP | | $0 | | $0 | | Flexible STP | **$0** |
| State | | $5,000 | | $6,000 | | State | **$11,000** |
| Local | | $1,000 | | $2,000 | | Local | **$3,000** |
| ***Year Total:*** | **$0** | **$30,000** | **$0** | **$40,000** | **$0** | ***Total Funds:*** | **$70,000** |
| Description: | **Before Adjustment #9** | | | | | | |
| STIP ID: | **JNT0016** | Title: Expansion Rolling Stock | | Recipient: | **JAUNT, Inc.** | | |
| FTA 5311 | | | $232,000 | | | FTA 5311 | **$232,000** |
| FTA 5339 | | $305,000 | | | $349,000 | FTA 5339 | **$654,000** |
| Flexible STP | | $0 | $0 | | $0 | Flexible STP | **$0** |
| State | | $61,000 | $46,000 | | $70,000 | State | **$177,000** |
| Local | | $15,000 | $12,000 | | $17,000 | Local | **$44,000** |
| ***Year Total:*** | **$0** | **$381,000** | **$290,000** | **$0** | **$436,000** | ***Total Funds:*** | **$1,107,000** |
| Description: | Adjustment #9: Remove FY20 funding $412K (remove FTA 5339 $330K, State $66K, local $16K). No funding in FY20 draft SYIP. | | | | | | |
| STIP ID: | **JNT0016** | Title: Expansion Rolling Stock | | Recipient: | **JAUNT, Inc.** | | |
| FTA 5339 | | $305,000 | $232,000 | $330,000 | $349,000 | FTA 5339 | **$1,216,000** |
| Flexible STP | | $0 | $0 | $0 | $0 | Flexible STP | **$0** |
| State | | $61,000 | $46,000 | $66,000 | $70,000 | State | **$243,000** |
| Local | | $15,000 | $12,000 | $16,000 | $17,000 | Local | **$60,000** |
| ***Year Total:*** | **$0** | **$381,000** | **$290,000** | **$412,000** | **$436,000** | ***Total Funds:*** | **$1,519,000** |
| Description: **Before Adjustment #9** | Adjustment #3 and #4: Decrease FY19 funding $106K (decrease FTA 5339 $85K, decrease State $17K, decrease local $4K) in accordance with draft FY19 SYIP. | | | | | | |

| STIP ID: | **JNT0017** | Title: Misc Equipment | | | Recipient: | **JAUNT, Inc.** | |
|---|---|---|---|---|---|---|---|
| FTA 5311 | | | $41,000 | | | FTA 5311 | **$41,000** |
| State | | | $8,000 | | | State | **$8,000** |
| Local | | | $2,000 | | | Local | **$2,000** |
| ***Year Total:*** | **$0** | **$0** | **$51,000** | **$0** | **$0** | ***Total Funds:*** | **$51,000** |
| Description: | Adjustment #3: Decrease FY19 funding $74K (decrease FTA 5311 $59K, decrease State $12K, decrease local $3K) in accordance with draft FY19 SYIP. | | | | | | |
| STIP ID: | **JNT0018** | Title: Fare Collection Equipment (Fareboxes) | | | Recipient: | **JAUNT, Inc.** | |
| FTA 5311 | | $131,000 | | | | FTA 5311 | **$131,000** |
| State | | $26,000 | | | | State | **$26,000** |
| Local | | $7,000 | | | | Local | **$7,000** |
| ***Year Total:*** | **$0** | **$164,000** | **$0** | **$0** | **$0** | ***Total Funds:*** | **$164,000** |
| Description: | | | | | | | |
| STIP ID: | **JNT0019** | Title: Mobility Management | | | Recipient: | **JAUNT, Inc.** | |
| FTA 5311 | | $50,000 | $32,000 | | | FTA 5311 | **$82,000** |
| State | | $10,000 | $6,000 | | | State | **$16,000** |
| Local | | $3,000 | $2,000 | | | Local | **$5,000** |
| ***Year Total:*** | **$0** | **$63,000** | **$40,000** | **$0** | **$0** | ***Total Funds:*** | **$103,000** |
| Description: | Adjustment #3: Add funding for FY19 $40K (add FTA 5311 $32K, State $6K, local $2K) per FY19 draft SYIP. | | | | | | |
| STIP ID: | **JNT0020** | Title: Furniture & Equipment | | | Recipient: | **JAUNT, Inc.** | |
| FTA 5311 | | $80,000 | | | | FTA 5311 | **$80,000** |
| State | | $16,000 | | | | State | **$16,000** |
| Local | | $4,000 | | | | Local | **$4,000** |
| ***Year Total:*** | **$0** | **$100,000** | **$0** | **$0** | **$0** | ***Total Funds:*** | **$100,000** |
| Description: | | | | | | | |
| STIP ID: | **JNT0021** | Title: Interactive Voice Response System | | | Recipient: | **JAUNT, Inc.** | |
| FTA 5311 | | $160,000 | | | | FTA 5311 | **$160,000** |
| State | | $32,000 | | | | State | **$32,000** |
| Local | | $8,000 | | | | Local | **$8,000** |
| ***Year Total:*** | **$0** | **$200,000** | **$0** | **$0** | **$0** | ***Total Funds:*** | **$200,000** |
| Description: | | | | | | | |

# Appendix A. Projects by Grouping

This page is intentionally left blank

# Appendix B. Performance Based Planning and Programing for Roadways

## Performance Based Planning and Programming

Performance Based Planning and Programming requirements for transportation planning are laid out in the Moving Ahead for Progress in the 21st century (MAP-21), enacted in 2012 and reinforced in the 2015 FAST Act, which calls for states and MPOs to adopt performance measures. Each MPO adopts a set of performance measures, in coordination with the Virginia Department of Transportation (VDOT) and the Virginia Department of Rail and Public Transit (DRPT), and these measures are used to help in the prioritization of TIP and Long-Range Transportation Plan projects. Additional information about VDOT's Planning and Programming efforts are provided as Appendix G.

Rollout of performance measures is ongoing. A schedule of the rollout is included below:

**Table 1: Expected Performance Measure Schedule**

| Final Rule | Effective Date | States Set Target By | MPOs Set Targets By | LRTP/Tip Inclusion |
|---|---|---|---|---|
| Safety Performance Measures (PM1) | April 14, 2016 | Aug 31, 2017 | Up to 180 days after the States set targets, but no later than Feb 27, 2018 | Updates or amendments on or after May 27, 2018 |
| Pavement and Bridge Performance Measures (PM2) | May 20, 2017 | May 20, 2018 | No later than 180 days after State sets targets | Updates or amendments on or after May 20 2019 |
| System Performance Measures (PM3) | May 20, 2017 | May 20, 2018 | No later than 180 days after State sets targets | Updates or amendments on or after May 20 2019 |

See Appendix C. for Transit Access Management Plan performance measures.

The MPO has been coordinating with VDOT and DRPT to adopt performance measures and targets as they become available. Once the initial performance measures and targets are adopted, the MPO will continue to monitor and report progress at required intervals set forth in State and Federal guidance. To date the MPO has formally adopted the following performance measures and targets:

### Adopted Measures:

1. **Safety Performance Measures (PM1) – November 29, 2018**
   In accordance with the requirements of MAP-21 and the FAST Act, Virginia has established safety performance objectives as published in Virginia's 2017 - 2021Strategic Highway Safety Plan (SHSP) and, starting in 2017, annual targets in the Highway Safety Improvement Program (HSIP) Annual Report. The SHSP performance measure objectives are indicated in Table 1 below.

   There are five measures that make up the safety category. These measures include the number of fatalities, fatality rate, the number of serious injuries, serious injury rate, and the number of crashes involving bike/ped. The MPO has adopted the state-wide Safety Targets for the five

measures. For safety performance measures 1, 2, and 3, annual targets were developed collaboratively by the MPO, Department of Motor Vehicles (DMV) Highway Safety Office (HSO) and VDOT HSIP staff. The DMV HSO also includes these measures in their Highway Safety Plan submitted to the National Highway Traffic Safety Administration (NHTSA) every June.

The Commonwealth Transportation Board approves all five annual targets and VDOT includes these in the HSIP Annual Report submitted to FHWA every August. Within 180 days of VDOT's annual report submission to FHWA, The MPO has adopted the Statewide targets for 2019 in the table listed below. The MPO will assess and update these targets annually.

**Table 2: 2019-2023 SHSP Safety Performance Objectives**

| Performance Measure | Five-year average annual reduction |
|---|---|
| Number of Fatalities | -3.15% |
| Rate of Fatalities per 100 Million Vehicle Miles Traveled | -1.4% |
| Number of Serious Injuries | 1.15% |
| Rate Serious Injury Million Miles Vehicle Miles Traveled | 2.65% |
| Number of Non-Motorized Fatalities & Serious Injuries | 0.3% |

**2. Pavement and Bridge Condition (PM2) – August 24, 2018**

There are three measures that make up the pavement and bridge condition category. These measures include; the percentage of pavement in good condition (interstate), percentage of pavement in poor condition (interstate), percentage of pavement in good condition (non-interstate National Highway System), percentage of pavement in poor condition (non-interstate National Highway System), percentage of deck area of bridges in good condition (National Highway System), and the percentage of deck area of bridges in poor condition (National Highway System).

The MPO has reviewed the state targets (table 3) and adopted its own two and four-year targets based on local conditions (table 3).

**Table 3: Proposed PM2 Targets for MPO and Virginia**

| Performance Measure | Scope | MPO | | | State Target | | |
|---|---|---|---|---|---|---|---|
| | | 2017 Baseline | 2-year Target | 4-Year Target | 2017 Baseline | 2-year Target | 4-Year Target |
| % Pavement in Good Condition | Interstate | | | | 57.8% | 45% | 45% |
| % Pavement in Poor Condition | Interstate | | | | 0.4% | <3% | <3% |
| % Pavement in Good Condition | NHS (non Interstate) | | | | 35.4% | 25% | 25% |

Adopted State 4 year target

| | | | | | | | |
|---|---|---|---|---|---|---|---|
| %Pavement in Poor Condition | NHS (non Interstate) | | | | 0.9% | <5% | <5% |
| % of Bridge Deck Area in Good Condition | NHS (All) | 12.8% | 13% | 23% | 34.5% | 33.5% | 33.0% |
| % of Bridge Deck Area in Poor Condition | NHS (All) | 12.1% | 12% | 2% | 3.5% | 3.5% | 3.0% |

3. **System Performance (PM3) – August 24, 2018**

There are three measures that apply to the MPO in the System Performance category. These measures include; the percentage of person-miles traveled that are reliable (Interstates), Percentage of person-miles traveled that are reliable (National Highway System non-interstates), and truck travel times reliability index (Interstates).

The MPO has reviewed the state targets (table 4) and adopted its own two and four-year targets based on local conditions (table 4).

**Table 4: Proposed PM3 Targets for MPO and Virginia**

| Performance Measure | Scope | MPO | | | State Target | | |
|---|---|---|---|---|---|---|---|
| | | 2017 Baseline | 2-year Target | 4-Year Target | 2017 Baseline | 2-year Target | 4-Year Target |
| % Person-miles traveled that are reliable | Interstate | 99% | 99% | 99% | 82.56% | 82.2% | 82% |
| % Person-miles traveled that are reliable | NHS (Non Interstate) | 86.21% | n/a | 80% | 86.76% | n/a | 82.5% |
| Truck travel time reliability index | NHS (All) | 1.13 | 1.17 | 1.2 | 1.49 | 1.53 | 1.56 |

### CA-MPO Interstates and National Highway System Roadways

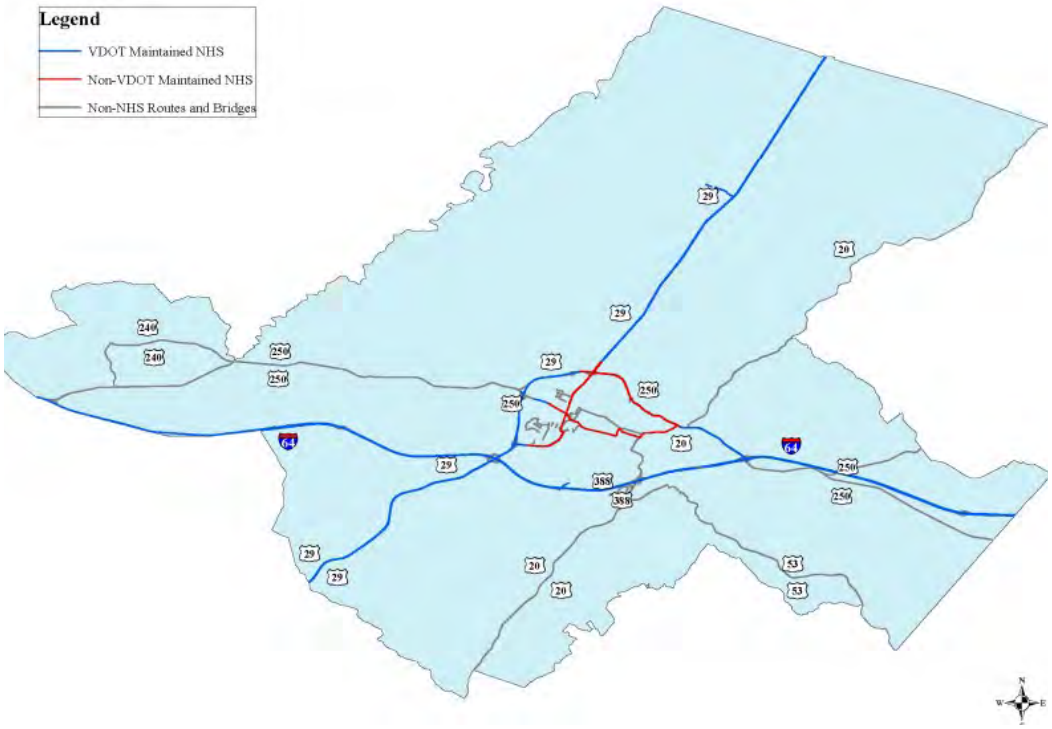


## Performance-Based Planning and Programming in the TIP and LRTP:

As Performance-Based Planning and Programming requirements are rolled out and targets are set, projects in the TIP have been assessed to connect project scopes, as identified in the TIP, to goals in the MPO Long Range Transportation Plan (LRTP 2040). The LRTP 2040 plan was developed with MAP-21 guidance and includes performance measures aligned with MAP-21. These goals are set out in Chapter 4 of the 2040 Long Range Transportation Plan, and listed below.

LRTP 2040 Goals:

1. Complete Streets: increase safe, convenient, and pleasant accommodations for pedestrians, bicyclists and people with disabilities that improve quality of life within the community and within individual neighborhoods.
2. Land use & community design: improve transportation options and quality of life through land use and community design techniques.
3. Arterial roadway network: improve mobility and safety of the arterial roadway network.
4. Efficient mobility: maintain an efficient transportation system that provides the mobility and access that supports the economic development goals of the City.
5. Parking: provide parking to adequately meet demand and support economic vitality without sacrificing aesthetics, while minimizing environmental impacts and accommodating pedestrians, bicycles, transit users and disabled individuals.
6. Transit system: create a transit system that increases local and regional mobility and provides a reliable and efficient alternative for Charlottesville's citizens.

7. Regional transportation: continue to work with appropriate governing bodies to create a robust regional transportation network.
8. Sustainable transportation infrastructure: develop a sustainable transportation infrastructure by designing, constructing, installing, using and maintaining the City's transportation assets and equipment in efficient, innovative and environmentally responsible ways.
9. Infrastructure funding: identify and seek new sources of sustainable funding protocol and mechanisms for the maintenance of existing infrastructure and facilities and future development of the transportation system.

## TIP linkage to adopted measures:

1. **New TIP and LRTP projects are reviewed for their linkages to safety needs using the following steps:**
   - Safety deficiencies are identified by analyzing crash data provided by VDOT as part of the Highway Safety Improvement Program.
   - Proposed projects are reviewed for their impact on safety using crash modification factors based on project design.

# Appendix C. Transit Asset Management

## Transit Asset Management Plans

The two most recent federal transportation laws, MAP-21 and FAST Act, establish performance measure requirements to ensure states and metropolitan planning organizations (MPOs) are investing transportation funds in projects that collectively will contribute towards the achievement of national goals. The USDOT recently published new rules for states and MPOs to collect data and establish performance targets that will support performance and outcome-based investment decisions.

The new federal performance measurement requirement for transit agencies focuses on one area: transit asset management (TAM). The measures look specifically at the percentage of revenue vehicles that have exceeded their Useful Life Benchmark (ULB), the percentage of non-revenue and service vehicles that have exceeded their ULB, and percentage of facilities with a condition below 3.0 on the Federal Transit Administrator's TERM Scale. All transit agencies receiving grants from the FTA are required to complete a TAM plan. The FTA has established two tiers of agencies based on size parameters.

- A Tier I agency operates rail, OR has 101 vehicles or more all fixed route modes, OR has 101 vehicles or more in one non-fixed route mode.
- A Tier II agency is a subrecipient of FTA 5311 funds, OR is an American Indian Tribe, OR has 100 or less vehicles across all fixed route modes, OR has 100 vehicles or less in one non-fixed route mode.

The first completed TAM plan must be sent to the National Transit Database (NTD) by October 1, 2018. Other required deadlines are found in the table below.

**Table 1: Transit agency deadlines for TAM Rulemaking for June-July fiscal year**

| Reporting Activity | Reporting Deadline |
|---|---|
| Complete compliant TAM Plan | October 2018 |
| Report FY18 asset data to NTD<br>Submit FY19 targets to NTD | October 2018 |
| Report FY19 asset data to NTD<br>Submit FY20 targets to NTD<br>Submit narrative report to NTD | October 2019 |
| Report FY20 asset data to NTD<br>Submit FY21 targets to NTD<br>Submit narrative report to NTD | October 2020 |
| Complete updated TAM Plan | October 2022 |

For Tier II providers under the DRPT Group Plan, any Transportation Improvement Program (TIP) document or Metropolitan Transportation Plan (MTP) adopted after October 1, 2018 will be in compliance with the TAM Plans developed by DRPT and adopted by the Tier II transit providers within the MPO as well as the regional performance measures adopted by the MPO as a whole. The performance measurements and the targets can be found in the DRPT *Group Transit Asset Management Plan and are referenced in table 2.*

The Charlottesville Albemarle MPO's planning process will integrate, either directly or by reference, the goals, objectives, performance measures, and targets described in the applicable Tier I and Tier II group plan.

**Table 2: Tier II Statewide DRPT TAM Plan Asset Category Performance Measure**

| Asset Category- | | | |
|---|---|---|---|
| Performance Measure | Asset Class | 2018 Target | 2019 Target |
| Revenue Vehicles | | | |
| Age - % of revenue vehicles within a particular asset class that have met or exceeded their Useful Life Benchmark (ULB) | Ab- Articulated Bus | 20% | 15% |
| | BU- Bus | 10% | 10% |
| | CU- Cutaway | 10% | 10% |
| | MB- Minibus | 25% | 20% |
| | BR- Over-the-road-bus | 20% | 15% |
| | TB- Trolley Bus | 10% | 10% |
| | VN- Van | 25% | 25% |
| Equipment | | | |
| Age - % of vehicles that have met or exceeded their Useful Life Benchmark (ULB) | Non-Revenue/Service Automobile | 25% | 25% |
| | Trucks & other rubber tire vehicles | 25% | 25% |
| Facilities | | | |
| Condition - % of facilities with a condition rating below 3.0 on the FTA TERM Scale | Admin and Maintenance Facilities | 10% | 10% |
| | Admin Offices | 10% | 10% |
| | Maintenance Facility | 10% | 10% |
| | Passenger Facilities | 10% | 10% |

# Appendix D. Self-Certification Statement

Thomas Jefferson Planning District Commission

*Regional Vision • Collaborative Leadership • Professional Service*

**METROPOLITAN TRANSPORTATION PLANNING PROCESS**
**SELF-CERTIFICATION STATEMENT**

In accordance with 23 CFR 450.336, the Virginia Department of Transportation and the Charlottesville-Albemarle Metropolitan Planning Organization for the Charlottesville urbanized area hereby certify that the transportation planning process is being conducted in accordance with all applicable requirements of:

(1) 23 U.S.C. 134, 49 U.S.C. 5303, and 23 CFR part 450 Subpart C (Metropolitan Planning);

(2) In nonattainment and maintenance areas, sections 174 and 176 (c) and (d) of the Clean Air Act, as amended (42 U.S.C. 7504, 7506 (c) and (d)) and 40 CFR part 93 (Conformity Determination);

(3) Title VI of Civil Rights Act of 1964, as amended (42 U.S.C. 2000d-1), 49 CFR part 21;

(4) 49 U.S.C. 5332 prohibiting discrimination on the basis of race, color, creed, national origin, sex, or age in employment or business opportunity;

(5) Section 1101(b) of the FAST ACT (Pub. L. 114-357) and 49 CFR part 26 regarding the involvement of disadvantaged business enterprises in USDOT funded projects (DBE Involvement);

(6) 23 CFR part 230, regarding the implementation of an equal employment opportunity program on Federal and Federal-aid highway construction contracts;

(7) The provisions of the Americans with Disabilities Act of 1990 (42 U.S.C. 12101 et seq.) and 49 CFR parts 27, 37, and 38;

(8) The Older Americans Act, as amended (42 U.S.C. 6101), prohibiting discrimination on the basis of age in programs or activities receiving Federal financial assistance;

(9) Section 324 of Title 23, U.S.C., regarding the prohibition of discrimination based on gender; and

(10) Section 504 of the Rehabilitation Act of 1973 (29 U.S.C. 794) and 49 CFR part 27 regarding discrimination against individuals with disabilities

CA MPO

Signature

Executive Director

Title

May 31, 2017

Date

Virginia Department of Transportation

Signature

District Engineer

Title

June 01, 2017

Date

# Appendix E. Resolution of Adoption FY 18-21 TIP

RES17_13

tjpdc.org

**Charlottesville-Albemarle Metropolitan Planning Organization**
POB 1505, 401 E. Water Street, Charlottesville, VA 22902 www.tjpdc.org
(434) 979-7310 phone • (434) 979-1597 fax • info@tjpdc.org email

**Resolution Authorizing Amendments to the**
**FFY18 – FFY21 Transportation Improvement Program (TIP)**

WHEREAS, the U.S. Department of Transportation (DOT) requires that each urbanized area of over 50,000 population prepare a Transportation Improvement Program (TIP) for the upcoming three of more years; and

WHEREAS, a Metropolitan Planning Organization (MPO) has been designated for the Charlottesville-Albemarle Urbanized Area, the Charlottesville-Albemarle MPO; and

WHEREAS, the Charlottesville-Albemarle MPO Transportation Improvement Program (TIP) is a prioritized listing/program of transportation projects covering a period of four years that is developed and formally adopted by an MPO as part of the metropolitan transportation planning process, consistent with the metropolitan transportation plan, and required for projects to be eligible for funding under title 23 U.S.C. and title 49 U.S.C. Chapter 53; and

WHEREAS, projects approved in the MPO TIP are eligible for inclusion in the Commonwealth of Virginia's Statewide Transportation Improvement Program which incorporates each MPO TIP by reference, in total and without change and is a requirement for federal funding assistance; and

NOW, THEREFORE BE IT RESOLVED that the Charlottesville-Albemarle Metropolitan Planning Organization (MPO) approves the Transportation Improvement Plan for the Federal Fiscal Years 2018 to 2021 TIP as attached.

Adopted this 24th day of May 2017 by the Charlottesville-Albemarle Metropolitan Planning Organization.

ATTESTED:

Kristin Szakos, Chair
Charlottesville-Albemarle MPO

May 24, 2017
Date

# Appendix F. TIP Amendment Resolutions

## RES 18-01

tjpdc.org

**Charlottesville-Albemarle Metropolitan Planning Organization**
POB 1505, 401 E. Water Street, Charlottesville, VA 22902 www.tjpdc.org
(434) 979-7310 phone • (434) 979-1597 fax • info@tjpdc.org email

**Resolution Authorizing Amendments to the**
**FFY18 – FFY21 Transportation Improvement Program (TIP)**
**RES18-01**

WHEREAS, the U.S. Department of Transportation (DOT) requires that each urbanized area of over 50,000 population prepare a Transportation Improvement Program (TIP) for the upcoming three or more years; and

WHEREAS, a Metropolitan Planning Organization (MPO) has been designated for the Charlottesville-Albemarle Urbanized Area, referred to as the Charlottesville-Albemarle MPO; and

WHEREAS, the Charlottesville-Albemarle MPO Transportation Improvement Program (TIP) is a prioritized listing/program of transportation projects covering a period of four years that is developed and formally adopted by an MPO as part of the metropolitan transportation planning process, consistent with the metropolitan transportation plan, and required for projects to be eligible for funding under title 23 U.S.C. and title 49 U.S.C. Chapter 53; and

WHEREAS, projects approved in the MPO TIP are eligible for inclusion in the Commonwealth of Virginia's Statewide Transportation Improvement Program, which incorporates each MPO TIP by reference, in total and without change and is a requirement for federal funding assistance; and

WHEREAS, the Virginia Department of Transportation (VDOT) requested amendments to UPC number 75878 – Route 20 Bridge Replacement Project for Belmont Bridge; and

WHEREAS, the details of the amendment is attached;

NOW, THEREFORE BE IT RESOLVED that the Charlottesville-Albemarle Metropolitan Planning Organization (MPO) approves the attached Transportation Improvement Plan amendments to the Federal Fiscal Years 2018 to 2021 TIP.

Adopted this 29th day of November 2017 by the Charlottesville-Albemarle Metropolitan Planning Organization.

ATTESTED:

Kristin Szakos, Chair
Charlottesville-Albemarle MPO

November 29, 2017
Date

MPO TIP Report

## Charlottesville MPO

Urban Projects

| UPC NO | | 75878 | SCOPE | Bridge Replacement w/o Added Capacity | | | |
|---|---|---|---|---|---|---|---|
| SYSTEM | | Urban | JURISDICTION | Charlottesville | | OVERSIGHT | NFO |
| PROJECT | | RTE 20 - BRIDGE REPLACEMENT | | | | ADMIN BY | Locally |
| DESCRIPTION | | FROM: GARRETT STREET/LEVY AVENUE TO: EAST MARKET STREET (0.3000 MI) | | | | | |
| ROUTE/STREET | | 9TH STREET NE (0020) | | | | TOTAL COST | $14,465,713 |
| | FUND SOURCE | | MATCH | FY18 | FY19 | FY20 | FY21 |
| RW | Federal - STP/STBG | | $0 | $500,000 | $0 | $0 | $0 |
| CN | Federal - BR | | $0 | $0 | $774,294 | $0 | $0 |
| | Federal - STP/STBG | | $280,741 | $0 | $3,931,132 | $0 | $0 |
| | Other | | $1,460,904 | $0 | $1,460,904 | $0 | $0 |
| CN TOTAL | | | $1,741,645 | $0 | $6,166,330 | $0 | $0 |
| CN AC | Federal - AC | | $0 | $0 | $4,976,858 | $0 | $0 |
| MPO Note | | | Amended on 11/29/2017 by the MPO Policy Board. | | | | |

| UPC NO | | 75878 | SCOPE | Bridge Replacement w/o Added Capacity | | | |
|---|---|---|---|---|---|---|---|
| SYSTEM | | Urban | JURISDICTION | Charlottesville | | OVERSIGHT | NFO |
| PROJECT | | RTE 20 - BRIDGE REPLACEMENT | | | | ADMIN BY | Locally |
| DESCRIPTION | | FROM: GARRETT STREET/LEVY AVENUE TO: EAST MARKET STREET (0.3000 MI) | | | | | |
| ROUTE/STREET | | 9TH STREET NE (0020) | | | | TOTAL COST | $14,465,713 |
| | FUND SOURCE | | MATCH | FY18 | FY19 | FY20 | FY21 |
| RW | Federal - STP/STBG | | $0 | $500,000 | $0 | $0 | $0 |
| CN | Federal - BR | | $0 | $0 | $774,294 | $0 | $0 |
| | Federal - STP/STBG | | $280,741 | $0 | $3,931,132 | $0 | $0 |
| | Other | | $1,460,904 | $0 | $1,460,904 | $0 | $0 |
| CN TOTAL | | | $1,741,645 | $0 | $6,166,330 | $0 | $0 |
| CN AC | Federal - AC | | $0 | $0 | $4,976,858 | $0 | $0 |

Before Amendment

## RES 19-01

**Charlottesville-Albemarle Metropolitan Planning Organization**
POB 1505, 401 E. Water Street, Charlottesville, VA 22902 www.tjpdc.org
(434) 979-7310 phone • (434) 979-1597 fax • info@tjpdc.org email

**Resolution Authorizing Amendments to the**
**FFY18 – FFY21 Transportation Improvement Program (TIP)**
**RES19-01**

WHEREAS, the U.S. Department of Transportation (DOT) requires that each urbanized area of over 50,000 population prepare a Transportation Improvement Program (TIP) for the upcoming three or more years; and

WHEREAS, a Metropolitan Planning Organization (MPO) has been designated for the Charlottesville-Albemarle Urbanized Area, referred to as the Charlottesville-Albemarle MPO; and

WHEREAS, the Charlottesville-Albemarle MPO Transportation Improvement Program (TIP) is a prioritized listing/program of transportation projects covering a period of four years that is developed and formally adopted by an MPO as part of the metropolitan transportation planning process, consistent with the metropolitan transportation plan, and required for projects to be eligible for funding under title 23 U.S.C. and title 49 U.S.C. Chapter 53; and

WHEREAS, projects approved in the MPO TIP are eligible for inclusion in the Commonwealth of Virginia's Statewide Transportation Improvement Program, which incorporates each MPO TIP by reference, in total and without change and is a requirement for federal funding assistance; and

WHEREAS, the Virginia Department of Rail and Public Transportation (DRPT) requested amendments to CAT0003; and

WHEREAS, the details of the amendment is attached;

NOW, THEREFORE BE IT RESOLVED that the Charlottesville-Albemarle Metropolitan Planning Organization (MPO) approves the attached Transportation Improvement Plan amendments to the Federal Fiscal Years 2018 to 2021 TIP.

Adopted this 27th day of February 2019 by the Charlottesville-Albemarle Metropolitan Planning Organization.

ATTESTED:

Anne Mallek, Chair
Charlottesville-Albemarle MPO

Feb 27, 2019
Date

# ATTACHMENT FOR RES19-01

**CAT0003: Replacement Rolling Stock**

This amendment will:
- remove $2,356,000 from Flexible STP for FFY20;
- remove $471,000 from State for FFY20;
- remove $118,000 from Local for FFY20;

## Amendment 3, 1/22/20

Thomas Jefferson Planning District Commission
Charlottesville/Albemarle MPO

**Charlottesville-Albemarle Metropolitan Planning Organization**
POB 1505, 401 E. Water St, Charlottesville, VA 22902 www.tjpdc.org
(434) 979-7310 phone • info@tjpdc.org email

**Memorandum**

**To:** MPO-Policy Board
**From:** Lucinda Shannon, Transportation Planning Manager
**Date:** January 22, 2020
**Reference:** Amendments to the Transportation Improvement Program (TIP) FY18-21

**Purpose:** The VDOT and Charlottesville Area Transit requested amendments to the MPO's Transportation Improvement Plan, to be consistent with the State's Transportation Improvement Program (STIP). The MPO staff conducted public hearings on 1/21 and during this 1/22 Policy Board meeting to allow for public comment.

**Background:** There are three VDOT amendments that add funds to the project groupings - Maintenance: Preventive Maintenance and System Preservation, Maintenance: Preventive Maintenance for Bridges, and Maintenance: Traffic Safety Operations. The State transferred funding within projects. The STIP adjustments were based on actual obligations and current estimate.
Specifically, this adjustment makes the following modifications:

- Add $2,130,713 (NHPP) to Grouping, Maintenance: Preventive Maintenance and System Preservation

| | | | | | | |
|---|---|---|---|---|---|---|
| MPO | | Charlottesville | | | | |
| GROUPING | | Maintenance: Preventive Maintenance and System Preservation | | | | |
| Program NOTE | | Funding identified to be obligated districtwide as projects are identified. | | | | |
| ROUTE/STREET | | | | | TOTAL COST | |
| | FUNDING SOURCE | MATCH | FY18 | FY19 | FY20 | FY21 |
| CN | Federal-STP/STBG | $0 | $1,109,104 | $1,286,434 | $1,629,337 | $1,635,888 |
| MPO Notes | | Adjustment 21 12/16/2019 | | | | |
| | | | | | | |

- Add $3,076,190 (STP/STBG) & $1,000,000 (NHPP) to Grouping, Maintenance: Preventive Maintenance for Bridges

| | | | | | | |
|---|---|---|---|---|---|---|
| GROUPING | | Maintenance: Preventive Maintenance for Bridges | | | | |
| Program NOTE | | Funding identified to be obligated districtwide as projects are identified. | | | | |
| ROUTE/STREET | | | | | TOTAL COST | |
| | FUNDING SOURCE | MATCH | FY18 | FY19 | FY20 | FY21 |
| CN | Federal-STP/STBG | $0 | $2,498,514 | $2,897,990 | $3,670,459 | $3,685,217 |
| MPO Notes | | Adjustment 22. 12/16/2019 | | | | |

- Add $6,096,711 (STP/STBG) to Grouping, Maintenance: Traffic Safety Operations

| | |
|---|---|
| GROUPING | Maintenance: Traffic and Safety Operations |
| Program NOTE | Funding identified to be obligated districtwide as projects are identified. |

| ROUTE/STREET | | | | | TOTAL COST | |
|---|---|---|---|---|---|---|
| | FUNDING SOURCE | MATCH | FY18 | FY19 | FY20 | FY21 |
| CN | Federal-STP/STBG | $0 | $290,503 | $336,950 | $426,765 | $428,481 |
| MPO Notes | | Adjustment 23. 12/16/2019 | | | | |

In addition, the Charlottesville Area Transit requests the following amendment:

- Charlottesville Area Transit is requesting a TIP amendment to replace one FY20 Project, upgrading its On-Board Surveillance System, with the purchase of an Automatic Passenger Counter System (APC) for its fleet of 36 buses. The amount, $595,000, will stay the same. See attached for the proposed updated copies of the TIP summary tables with the changing cells highlighted.

Once this TIP amendment is reviewed and approved by the MPO Policy Board, the TIP document for FY18-21 will be updated with the modified TIP tables.

**Action Item:** MPO staff recommends a motion to approve the TIP amendments.

IN WITNESS WHEREOF, the Charlottesville Albemarle Metropolitan Planning Organization Policy Board approved the above amendments to the Transportation Improvement Plan on January 22, 2010.

**Signatures:**

Ann Mallek, Chair
Charlottesville-Albemarle Metropolitan Planning Organization

WITNESS BY

If there are any questions or comments, please contact Lucinda Shannon at lshannon@tjpdc.org or (434) 979-7310 Ext.113.

# Appendix G. VDOT Performance Based Planning and Programming

This page is intentionally left blank